**Detroit Edison**

Jon P. Christinidis
Staff Attorney
(313) 235-7706

March 12, 2001

Ms. Dorothy Wideman
Executive Secretary
Michigan Public Service Commission
6545 Mercantile Way
Lansing, MI 48911

**Re: Application For Immediate Ex Parte Approval of Unexecuted Distribution Interconnection Agreement MPSC Case No. U-12866**

Dear Ms. Wideman:

Please find enclosed for filing with the Commission an original and four copies of The Detroit Edison Company's **Application For Immediate Ex Parte Approval of Unexecuted Distribution Interconnection Agreement** in the above captioned matter, along with Proof of Service.

Very truly yours,

Jon P. Christinidis

JPC/dj
Enclosures

STATE OF MICHIGAN

BEFORE THE MICHIGAN PUBLIC SERVICE COMMISSION

| | | |
|---|---|---|
| In the matter of the application of THE DETROIT EDISON COMPANY for approval of an unexecuted Distribution Interconnection Agreement associated with the "Rouge Complex" and Dearborn Industrial Generation, L.L.C. | ) | Case No. U-12866 |

**APPLICATION FOR IMMEDIATE *EX PARTE* APPROVAL OF UNEXECUTED DISTRIBUTION INTERCONNECTION AGREEMENT**

NOW COMES THE DETROIT EDISON COMPANY, by and through its attorneys, and pursuant to the Rules of Practice and Procedure Before the Commission (R 460.17101 et. Seq.) and the Michigan Administrative Procedures Act (MCL 24.201 et. Seq.), files this Application for immediate *ex parte* approval of the attached unexecuted agreement for the interconnection of distribution equipment owned by The Detroit Edison Company (hereinafter "Detroit Edison" or "Company") and the distribution and generation equipment owned and/or controlled by Dearborn Industrial Generation, L.L.C. (and/or an affiliate thereof) (hereinafter "DIG") and treatment of retail power consumption at the Ford Motor Company Rouge industrial complex (hereinafter "Rouge Complex") site. In support thereof, the Company states as follows:

1. Applicant, The Detroit Edison Company is a public utility subject to the jurisdiction of the Michigan Public Service Commission ("MPSC"), organized and existing under the laws of the State of Michigan and engaged in the provision of retail electric service in southeastern Michigan.

2. DIG is a limited liability company affiliated with CMS Energy and engaged in the construction and operation of electric generating facilities and other distribution equipment in Dearborn, Michigan as well as, directly or through marketing affiliates, the provision of retail electric service to several industrial customers within or near the Rouge Complex in Dearborn, Michigan.

3. Until boiler explosions rendered it inoperable in 1998, the Ford Motor Company owned and operated a generating facility at the Rouge Complex. Pursuant to agreements dated December 15, 1932, August 22, 1952, August 5, 1954, November 26, 1974, July 20, 1979 (and 1981 Amendments thereto) Applicant and the Ford Motor Company had constructed and operated certain interconnecting electrical lines and associated equipment for the purposes of providing the mutual benefits arising from interconnected system operations, including the exchange of electrical energy. The Michigan Public Service Commission approved the 1979 interconnection agreement in MPSC Case No. U-6218.

4. Subsequent to the 1998 generator accident at the Rouge Complex, Detroit Edison has played a critical role in repairing and reconfiguring various equipment at the Rouge Complex, and has supplied power at tariff rates to the several industrial customers at the Rouge Complex, enabling the Ford Motor Company to quickly return the Rouge Complex to full production. It appears unlikely that the original Rouge Complex generating equipment will be returned to service.

5. During this same period, DIG commenced and continued construction on generation facilities and associated equipment located on or near the Rouge Complex. According to a May 1, 2000 Application for approval of contracts and a Certificate of

Public Convenience and Necessity pursuant to Act 69, CMS MS&T Michigan (a wholly owned subsidiary of CMS MS&T, and an affiliate of CMS Energy), has entered into agreements to provide retail electric service to the Rouge Steel Company, Ford Motor Company "and other eligible customers" at the Rouge Complex. (MPSC Case No. U-12419, Application dated May 1, 2000) It was apparently contemplated that CMS MS&T Michigan would serve at least two of these Rouge Complex customers (Double Eagle and Ladle Met) in June 2000. (MPSC Case No. U-12419, Application dated May 1, 2000) That contemplated service has not yet occurred and Detroit Edison, at present, continues to serve all of the Rouge Complex customers pursuant to its retail electric service tariffs.

6. It is Detroit Edison's understanding that DIG, either directly or through its marketing affiliates, intends to provide retail electric supply from these generation facilities to the several industrial customers located within or near the Rouge Complex. It is also the Company's understanding that DIG intends to receive and deliver electric energy on and over the electric system of Detroit Edison for various reasons, including but not limited to, the profitability of operating their generation facilities and the profitability of directly serving the retail industrial customers at the Rouge Complex.

7. The Commission has the authority to approve Special Contracts pursuant to MCL 462.11 and R 460.2031. R 460. 2031 provides:

> When a special contract is entered into by a utility for the sale of its product or services in a manner or at a rate not specifically covered by its filed rules and rate schedules, an application for approval shall be filed with the commission. A conformed copy of such contract, as approved by the commission, shall be filed within 30 days after approval. (R 460.2031)

8. The circumstances involved with the provision of electric service to the Rouge Complex are unique to Detroit Edison and DIG, are not specifically covered by Detroit Edison's filed rules and rate schedules (or the application of those rules and rate schedules to the Rouge Complex and DIG project are disputed by DIG and various other CMS affiliates) and have developed a history of Commission involvement. Thus, the attached unexecuted Distribution Interconnection Agreement constitutes a Special Contract requiring approval by the Michigan Public Service Commission. Furthermore, the Rouge Complex is connected to Detroit Edison's distribution system by radial lines and Article 3, Section 3.1(c) of the unexecuted Distribution Interconnection Agreement, of necessity, implicates the Company's Retail Access Service Tariff. Thus, jurisdiction over this agreement lies squarely with the Michigan Public Service Commission.

9. Detroit Edison has, at all times, acted in good faith to facilitate the continued and timely construction of the DIG facility and has attempted, in good faith, to reach a mutually acceptable interconnection arrangement with DIG. Detroit Edison has entered into temporary interconnection arrangements as well as test energy purchase arrangements with DIG during the continued construction of the DIG project. Detroit Edison has, as late as February 2001, offered to enter into a short-term Distribution Interconnection Agreement and has otherwise complied with DIG's request that the Company file a long-term unexecuted Distribution Interconnection Agreement at FERC.[1] In fact, the DIG project is already *physically* interconnected to Detroit Edison's distribution system, or could be *physically made so by DIG within one day without*

[1] Detroit Edison is contemporaneously submitting the attached unexecuted Distribution Interconnection Agreement to FERC and requesting that FERC disclaim jurisdiction. It is anticipated that the ITC will withdraw from FERC the previously filed unexecuted interconnection agreement.

*further Detroit Edison intervention, albeit against Detroit Edison's wishes and without a fully executed or approved Distribution Interconnection Agreement.* Unfortunately, the Company's efforts have not resulted in a Distribution Interconnection Agreement, of any duration, that is acceptable to DIG.[2] One fundamental reason for the continued disagreement over the terms of interconnection is DIG's position that it is not legally required, over the long-term, and when wheeling in electric energy over the Detroit Edison electrical system, to provide service to the Rouge Complex retail industrial customers pursuant to the Detroit Edison Retail Access Service Tariff. The effective result of DIG's position in situations like this where entities seek to be more than "self-service" generators and/or may seek to engage in "affiliate wheeling" as defined in 2000 PA 141 Sec. 10(a)(6) and (7) would be a bypass of Detroit Edison's securitization, stranded cost, transition and distribution charges associated with the Rouge Complex, thereby inequitably shifting such cost responsibility to other customers and frustrating the intent and purpose of both 2000 PA 141 and the Michigan Public Service Commission's electric restructuring efforts.

10. DIG has recently represented to Detroit Edison that it wishes to commence additional generation testing as soon as the week of March 12, 2001. Detroit Edison desires to facilitate that generation testing, as well as the ultimate commercial operation of the DIG facility.

11. In order to assure the appropriate recovery of securitization, stranded cost, transition and distribution charges of the Company, and to facilitate the generation testing

[2]As a result of DIG's dissatisfaction with the FERC proposal, and the Michigan Public Service Commission's clear jurisdiction over distribution facilities and retail energy sales, Detroit Edison anticipates that the prior FERC filing will be withdrawn.

desired by DIG in an efficient and expeditious manner, Detroit Edison respectfully requests that the Commission immediately review and approve the attached unexecuted Distribution Interconnection Agreement between Detroit Edison and DIG, thereby assuring the appropriate recovery of Detroit Edison charges from DIG, as well as facilitating an increase of independent, non-utility generation capacity in Michigan.

12. Immediate approval of the attached unexecuted Distribution Interconnection Agreement will further certain fundamental purposes of 2000 PA 141, including:

> "To encourage the development and construction of merchant plants." [Sec. 10 (2)(c)], and
>
> "[T]o promote financially healthy and competitive utilities in this state." [Sec. 10(2)(e)]

Further, the relief requested by Detroit Edison is consistent with the Commission's February 5, 2001 order in MPSC Case No. U-12485 regarding the interconnection of merchant plants.

13. Approval of the attached unexecuted Distribution Interconnection Agreement will not result in any increase in any rates or charges by Detroit Edison to retail electric customers and therefore may be accomplished without notice or hearing as provided for by MCL 460.6a.

WHEREFORE, The Detroit Edison Company respectfully requests that the Commission immediately approve in its entirety, *ex parte,* and give immediate effect to the attached unexecuted Distribution Interconnection Agreement.

THE DETROIT EDISON COMPANY

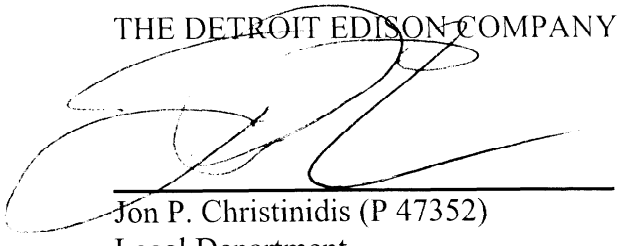

Jon P. Christinidis (P 47352)
Legal Department
2000 Second Avenue, 688 WCB
Detroit, Michigan 48226
(313) 235-7706

Dated: March 12, 2001

# DISTRIBUTION INTERCONNECTION AGREEMENT

## BY AND BETWEEN

## DEARBORN INDUSTRIAL GENERATION, L.L.C.

## AND

## THE DETROIT EDISON COMPANY

## EFFECTIVE AS OF MARCH 13, 2001

# TABLE OF CONTENTS


Article 1 - Definitions .....1

Article 2 - Term and Termination of Agreement .....4
2.1 Term .....4
2.2 Termination .....4

Article 3 - Interconnection and Reimbursement .....6
3.1 Interconnection / Other Services .....6
3.2 Construction of Distribution/Interconnection Facilities and ITC System Improvements .....7
3.3 Reimbursement of Company .....7
3.4 Future Modifications .....7

Article 4 - Rights of Way and Access to Premises .....9

Article 5 – Generator Interconnection Studies and Procedures .....9
5.1 Interconnection Study .....9
5.2 Cost of Interconnection Study .....9
5.3 Facility and Equipment Design and Construction .....9
5.4 Project Scoping .....9
5.5 Construction Schedule .....9
5.6 The Company's Review, Acceptance and Inspection of Distribution/Interconnection Facilities .....10
5.7 Start-up and Testing .....11

Article 6 - Right to Terminate .....11

Article 7 - Operation and Maintenance .....12
7.1 Synchronous Operation .....12
7.2 Obligation to Maintain Equipment .....12
7.3 Compliance with Reliability Council Standards .....12
7.4 Synchronization of the Facility .....12
7.5 Energization of Distribution/Interconnection Facilities .....13
7.6 Facility Control, Operation and Event Analysis .....13
7.7 Electric Energy Delivered to the Company .....14
7.8 Control Area Operations .....16
7.9 Obligation to Supply Reactive Power .....17
7.10 Commercial Operation .....18

Article 8 - Delivery and Measurement of Electric Energy .....19
8.1 Voltage Level .....19

8.2 Machine Reactive Capability ..... 19
8.3 Revenue Metering ..... 19
8.4 Telemetering ..... 20
8.5 Scheduling of Generation ..... 20
8.6 Generation Imbalance Service ..... 21

Article 9 - Billing and Payment ..... 21
9.1 Billing Procedures ..... 21
9.2 Billing Disputes ..... 21
9.3 Audit Rights ..... 21

Article 10 - Communications ..... 22

Article 11 - Continuity of Service ..... 22
11.1 Curtailment of Distribution/Interconnection Facilities ..... 22
11.2 Notice of Curtailment of Distribution/Interconnection Facilities ..... 22

Article 12 - Disputes ..... 23
12.1 Technical Disputes ..... 23

Article 13 - Force Majeure ..... 24
13.1 Force Majeure ..... 24
13.2 Notice ..... 24
13.3 Effect of Force Majeure ..... 24
13.4 Scope ..... 25

Article 14 - Indemnification and Limitation on Liability ..... 25
14.1 Indemnification by Customer ..... 25
14.2 Indemnification by the Company ..... 25
14.3 Limitation on Liability ..... 25
14.4 Right to Suspend Performance ..... 25

Article 15 - Assignment ..... 26

Article 16 - Other Provisions ..... 26
16.1 Governing Law ..... 26
16.2 Headings Not Affecting Meaning ..... 26
16.3 Amendments ..... 26
16.4 Waiver ..... 26
16.5 Notices ..... 27
16.6 Entire Agreement ..... 27
16.7 No Third Party Beneficiaries ..... 27
16.8 Regulatory Approval ..... 27

16.9 Counterparts....28

Article 17 –Insurance....28
17.1 Customer's Insurance....28
17.2 Notice and Certification....28

Signatures....29

**Exhibit A** - Simplified Single Line of Distribution/Interconnection Facilities

**Exhibit B** – CIAC Facilities Cost and O&M Cost

**Schedule A** – Generation Imbalance Service

# DISTRIBUTION INTERCONNECTION AGREEMENT

THIS DISTRIBUTION INTERCONNECTION AGREEMENT (the "Agreement") is made and entered into as of the _____ day of _____, 2001 (the "Effective Date") by and between Dearborn Industrial Generation, L.L.C. ("*Customer*"), a Michigan limited liability company, and The Detroit Edison Company ("*Company*"), a Michigan corporation. The Customer and Company shall be, individually, a "Party" and, collectively, the "Parties".

**WITNESSETH:**

WHEREAS, the Customer plans to own and operate a power and steam generation facility, including four (4) electricity generators and associated appurtenances, located in Dearborn, Michigan (the "Facility") having a maximum output of 780 MW at 230 kV;

WHEREAS, this Agreement provides for interconnection of the Facility and Customer's distribution and interconnection facilities to distribution and interconnection facilities owned by the Company which, in turn, will be interconnected to The International Transmission Company ("*ITC"*) electric transmission system;

WHEREAS, the Customer has requested and Company has agreed to enter into a distribution interconnection agreement to enable the Customer to interconnect with facilities of the Company, said interconnection to be used, pursuant to separate agreements or tariffs, for the purposes of both distributing power to retail electric loads connected to Customer's facilities and transmitting electric power from the Facility to the ITC electric transmission system; and

WHEREAS, under this Agreement the Customer will provide a Contribution In Aid of Construction ("*CIAC*") for certain Company facilities related to the interconnection of Customer's facilities to the Company's facilities.

NOW, THEREFORE, for and in consideration of the agreements set forth herein, and other good and valuable consideration, the receipt and sufficiency of which are hereby acknowledged, the Customer and Company hereby agree as follows:

## ARTICLE 1
## DEFINITIONS

Whenever used in this Agreement, the following terms shall have the following meanings:

1.1 "***Affiliate***" shall mean, with respect to any Person, another Person (i) which directly, or indirectly through one or more intermediaries, controls, or is controlled by, or is under common control with, such Person, (ii) which, directly or indirectly, of record or beneficially, owns or holds 10% or more of the shares of any class of capital stock or other ownership interest of such Person having voting power or (iii) as to which 10% or

more of the shares of any of the capital stock or other ownership interest of the Affiliate having voting power is owned or held, directly or indirectly, of record or beneficially, by or for such Person. For purposes of this definition, "control" when used with respect to any entity means the power to direct the management and policies of such entity, directly or indirectly, whether through the ownership of voting securities, by contract or otherwise; and the terms "controlling" and "controlled" have meanings correlative to the foregoing.

1.2 ***"Business Day***" shall mean any day of the week other than a Saturday or Sunday that is not a federal or State of Michigan holiday, or a day on which banks in the state of Michigan are authorized by law or executive order to be closed.

1.3 "***Change in Law***" shall mean the adoption, promulgation, repeal, amendment, reinterpretation, change in application or modification of any law, rule, regulation, ordinance, order or similar requirement of and by any Governmental Authority which occurs subsequent to the Effective Date of this Agreement (other than acceptance or approval of this Agreement as written by a regulatory authority with jurisdiction over it), that establishes either a material increase in cost or material reduction in revenue as a consequence of any requirement that is materially more restrictive than that existing on the date hereof and materially impacts the design, construction or operation of the Facility or the Distribution/Interconnection Facilities.

1.4 "***Commercially Reasonable***" shall mean, with respect to any action required to be made, attempted, or taken by a Party under this Agreement, such efforts as a reasonably prudent business would undertake for the protection of its own interests under the conditions affecting such action, including but not limited to the amount of notice of the need to take such action, the duration and type of such action, the competitive environment in which such action occurs and the risk to the Party required to take action.

1.5 "***Commercial Operation Date***" shall be established for each generator as mutually agreed to between the Parties after which all energy delivered to the facilities of the Company for further delivery to the ITC System is scheduled and coordinated under the terms of the ITC OATT.

1.6 "***Distribution/Interconnection Facilities***" shall mean all of the equipment described below and further described in Exhibit A, which is attached hereto and made a part of this Agreement.

a. ***"Company Distribution/Interconnection Facilities"*** shall mean the equipment constructed, owned, operated, or maintained by or for the Company on its side of the Points of Interconnection that in the Company's reasonable judgment is required to be installed to accommodate distribution of electric energy to Customer's site and the interconnection of the Facility to the Company's facilities and thereon to the ITC System. Company Distribution/Interconnection Facilities will include: (1) the 230 kV conductor from the Navarre-Waterman Tap up to and including the disconnect

switch at DIG Tower No. 3, and (2) the 230 kV conductor from the Baxter Substation up to and including the disconnect switch at Baxter Position HG including associated relays and control devices. Company Distribution/Interconnection Facilities shall also mean any metering, communications and relaying equipment constructed, owned, operated, or maintained by or for the Company on Customer's side of the Points of Interconnection that in the Company's reasonable judgment is required to be installed to accommodate distribution of electric energy to loads on Customer's side of the Points of Interconnection or the interconnection of Customer's facility to the Company's facilities and thereon to the ITC System.

b. ***"Customer Distribution/Interconnection Facilities"*** shall mean the equipment constructed, owned, controlled, operated, or maintained by the Customer or third parties on Customer's side of the Points of Interconnection that in the Company's reasonable judgment is required to be installed to accommodate distribution of electric energy to loads on Customer's side of the Points of Interconnection or the interconnection of Customer's facility to the Company's facilities and thereon to the ITC System. Customer Distribution/Interconnection Facilities will include: (1) the DIG 230 kV GIS Ring Bus; and (2) the 230 kV conductor from the Baxter Substation up to and including the 230 conductor connecting to the DIG 230 kV GIS Ring Bus.

All Company Distribution/Interconnection Facilities shall be owned by Company, or if ITC requires that it own certain interconnection facilities, by Company and ITC; provided, however, that in any case the Company shall own a portion of the Distribution/Interconnection Facilities between Customer and ITC in order for Company to assess applicable retail charges pursuant to the Michigan retail access program.

1.7 "***Facility***" shall mean the power and steam generation facility, including four (4) electricity generators and associated appurtenances, located in Dearborn, Michigan (the "Facility") having a maximum output of 780 MW at 230 kV.

1.8 "***Force Majeure***" shall have the meaning set forth in Article 13.

1.9 "***Good Utility Practice***" shall mean any of the practices, methods and acts engaged in or approved by a significant portion of the electric utility industry during the relevant time period, or any of the practices, methods and acts which, in the exercise of reasonable judgment in light of the facts known at the time the decision was made, could have been expected to accomplish the desired result at the lowest reasonable cost consistent with good business practices, reliability, safety and expedition. Good Utility Practice is not intended to be limited to the optimum practice, method or act to the exclusion of all others, but rather to be a spectrum of acceptable practices, methods or acts generally accepted in the region by the utility industry.

1.10 "***Governmental Authority***" shall mean a local, state, regional, federal or national administrative, legal, judicial or executive agency, commission, department or other governmental entity.

1.11 ***"ITC System"*** shall mean the electric transmission facilities owned by International Transmission Company, its successor(s) or assign(s).

1.12 "***OATT"*** shall mean any applicable open access transmission tariff filed with the Federal Energy Regulatory Commission for the purpose of accommodating transmission service for electric energy as provided by the Facility, as may be amended from time-to-time.

1.13 ***"Person"*** means any individual, corporation, limited liability company, partnership, joint venture, association, joint stock company, trust, trustee(s) of a trust, unincorporated organization, or any federal, state, county, municipal or regional governmental authority, agency, board, body, instrumentality or court.

1.14 ***"Persons Indemnified*** means, collectively or individually (as the context might indicate), Company, Company's Affiliates, and the directors, officers, representatives, agents and employees of each of them.

1.15 ***"Points of Interconnection***" shall be the disconnect switch at DIG Tower No. 3 and the disconnect switch at Baxter Position HG, as shown in Exhibit A, attached hereto.

1.16 "***System Emergency***" shall mean a condition or situation which in the sole judgment of Company or ITC, (i) may cause a significant disruption on or significant damage to the ITC System (or any material portion thereof) or any systems interconnected with the ITC System (or any material portion thereof), or (ii) may cause significant disruption on or significant damage to the Company's Distribution/Interconnection Facilities, or (iii) may cause any other unforeseen circumstance or combination of circumstances necessitating immediate action to avert significant impairment or degradation of ITC System reliability.

## ARTICLE 2
## Term and Termination of Agreement

2.1 **Term.** This Agreement shall be effective as of the Effective Date and shall remain in effect for an initial term ending December 31, 2030 (the "Term").

2.2 **Termination.** If any of the following events (each an "*Event of Default*") shall occur and be continuing after the applicable cure period and any notice requirement:

a. Failure of a Party to make any payment required pursuant to this Agreement and such failure shall continue for a period of thirty (30) days after receipt of written notice thereof; or

b. Failure of a Party in any material respect to comply with, observe or perform any covenant or obligation under this Agreement, and after receipt of written

notice, such failure shall continue for a period of thirty (30) days unless such Party shall have commenced efforts to and shall be continuing in good faith the pursuit of a remedy for such failure, the cure of which shall be completed in a reasonable period given the nature of the failure but for no longer period; or

c. (i) A receiver, liquidator or trustee of a Party or of any of its property shall be appointed by a court of competent jurisdiction, and such receiver, liquidator or trustee shall not have been discharged within sixty (60) days, or (ii) by decree of such court a Party shall be adjudicated bankrupt or insolvent or any substantial part of its property shall have been sequestered, and such decree shall have continued undischarged and unstayed for a period of sixty (60) days after the entry thereof, or (iii) a petition to declare bankruptcy or to reorganize a Party pursuant to any of the provisions of the Federal Bankruptcy Code, or pursuant to any other similar state statute, shall be filed against a Party and shall not be dismissed within sixty (60) days after such filing; or

d. A Party shall file a voluntary petition in bankruptcy under any provision of any federal or state bankruptcy law or shall consent to the filing of any bankruptcy or reorganization petition against it under any similar law; or, without limiting the generality of the foregoing, a Party shall file a petition or answer or consent seeking relief or assisting in seeking relief in a bankruptcy under any provision of any federal or state bankruptcy law or shall consent to the filing of any bankruptcy or reorganization petition against it under any similar law, or any answer admitting the material allegations of a petition filed against it in such a proceeding; or a Party shall make an assignment for the benefit of creditors; or a Party shall admit in writing its inability to pay its debts generally as they become due; or a Party shall consent to the appointment of a receiver, trustee, or liquidator of it or of all or any part of its property;

then the non-defaulting Party may, by written notice, terminate this Agreement (other than Articles 9, 12, 13, 14, 15 and 16 or any other provisions of this Agreement related thereto) as of the date such notice is sent, or if the non-defaulting Party is the Company, then the Company may, at its election, terminate the Customer's interconnection with its facilities. In addition to the rights and remedies described in this Agreement, the non-defaulting Party may exercise, at its election, any right or remedy it may have at law or in equity, including compensation for monetary damages, injunctive relief and specific performance. The enumeration of the Events of Default hereunder shall not be construed to limit or exclude the right of either Party to seek such remedies for the material breach by the other Party of any other term, condition, covenant, warranty or obligation under this Agreement.

## ARTICLE 3
## Interconnection and Reimbursement

3.1 **Interconnection/ Other Services.** The Company shall interconnect the Facility and Customer's Distribution/Interconnection Facilities with the Company's Distribution/Interconnection Facilities and the ITC System in accordance with this Agreement.

a. The Parties agree that the Distribution/Interconnection Facilities shall be operated, maintained and repaired, replaced or modified in accordance with Good Utility Practice.

b. The Customer acknowledges and agrees that its access to and right to use the ITC System for transmission service are governed exclusively by the OATT applicable to the ITC System and all applicable laws and regulations. The Customer acknowledges that nothing in this Agreement shall constitute an expressed or implied representation, warranty or covenant on the part of Company, ITC or other transmission provider with respect to the current or future availability of transmission service on the ITC System or create any obligation to accept deliveries of electric energy from the Facility, unless the Customer or the party requesting delivery of the Customer's electric energy delivered to the ITC System have arranged for transmission service on the ITC System in accordance with the OATT. Customer also agrees that it shall be responsible and reimburse the Company for any and all charges imposed upon the Company by ITC resulting from the Company's interconnection of Customer's electric facilities and any generation or loads connected to such facilities with the Company's Distribution/Interconnection Facilities or the ITC System, including but not limited to transmission, ancillary service and/or control area charges.

c. The Customer acknowledges and agrees that the access and rights of Customer and any retail loads connected to Customer's electric facilities to use the Company's Distribution/Interconnection Facilities for transmission service or distribution service are governed by this Agreement and the Company's Retail Access Service Tariff. As a continuing condition of this Distribution Interconnection Agreement, Customer agrees to enroll and take service under the Company's Retail Access Service Tariff for any of its loads that use the Company's Distribution/Interconnection Facilities and Customer shall require any and all other retail loads connecting to Customer's electric facilities to enroll and take service under the Company's Retail Access Service Tariff, and in the event any such load does not do so, Customer shall include such load in its obligations under the Company's Retail Access Service Tariff. For purposes of this provision, Customer's loads and/or loads connected to Customer's electric facilities will be deemed to use the Company's Distribution/Interconnection

Facilities in an amount equal to (i) the contract demand as established under the Company's Retail Access Service Tariff, and (ii) for any kilowatthour-based charges under the Retail Access Service Tariff, including but not limited to charges for securitization, stranded costs, and transition costs, the greater of scheduled or actual net energy flows over the Points of Interconnection and into the Customer's facilities. Customer shall comply with any and all requirements of the RAST.

3.2 **Construction of Distribution/Interconnection Facilities and ITC System Improvements.** The Company shall design, procure, construct and install any Company Distribution/Interconnection Facilities required to interconnect Customer's electric facilities with the ITC System. The Company shall arrange with ITC to provide and/or design, procure, construct and install any substations, equipment or other facilities required to be installed on the ITC System that would not have been required but for the interconnection of the Facility. The Customer shall provide and/or design, procure, construct and install any Customer Distribution/Interconnection Facilities and equipment or other facilities required to be installed on the Ford/Rouge property in Dearborn, Michigan that would not have been required but for the interconnection of the Facility with the Company's Distribution/Interconnection Facilities. Customer shall provide and/or design, procure, construct and install such facilities and equipment in accordance with the requirements of Article 5.

3.3 **Reimbursement of Company.** The Customer shall reimburse the Company, in accordance with Exhibit B, for all costs related to the installation of facilities by the Company and/or ITC as provided in Section 3.2. The Customer shall also reimburse the Company for all costs incurred by the Company and/or ITC in coordinating and completing the start-up and testing program provided in Section 5.7 and all costs incurred by Company and/or ITC associated with witnessing any equipment testing. These costs include, but are not limited to: taxes, maintenance and insurance. The Customer shall also reimburse the Company for all costs incurred by the Company and/or ITC to support the Customer Distribution/Interconnection Facilities and any Company owned metering, communications and relaying equipment installed on the Customer's side of the Points of Interconnection.

3.4 **Future Modifications.**

a. The Parties recognize that from time to time certain modifications may be necessary to continue to economically, reliably and safely maintain and operate the Distribution/Interconnection Facilities and/or facilities on the ITC System. Such modifications may include alteration, augmentation, modification, removal, upgrade or replacement, changes in design, configuration, operation, maintenance, or location of any of the Distribution/Interconnection Facilities, including protective equipment, or replacement of malfunctioning equipment. The Company shall provide the Customer with reasonable advance notice of any modifications to the Distribution/Interconnection Facilities and/or the ITC

System proposed by the Company and/or ITC (hereinafter referred to as "*Distribution/Interconnection Facilities Modifications*"). Within ten (10) Business Days of the Customer's receipt of the Company's notice of proposed changes, the Parties shall meet to discuss such proposed modifications.

b. If the Distribution/Interconnection Facilities Modifications are the result of or necessitated by any improvement, upgrade or change being made generally to the ITC System, or any material portion thereof, in accordance with Good Utility Practice, then such Distribution/Interconnection Facilities Modifications shall be made at the Customer's expense. If the Customer disputes the necessity or cost of such modification as provided under this subsection (b), it may refer the issue for resolution pursuant to the dispute resolution procedures provided under this Agreement, and the Customer's expenditures in implementing such modification shall be subject to refund plus interest calculated in accordance with the methodology specified in 18 C.F.R. § 35.19a(a)(2) unless otherwise agreed. Distribution/Interconnection Facilities Modifications that are the result of or necessitated by any improvement, upgrade or change being made generally to the Facility shall be made at the Customer's expense. The Company shall design, install, own, operate and maintain modifications to Company Distribution/Interconnection Facilities and ITC shall design, install, own, operate and maintain modifications to the ITC System. The Customer shall design, install, own, operate and maintain modifications to Customer Distribution/Interconnection Facilities, subject to the requirements of Article 5.

c. The Customer shall provide the Company and ITC reasonable advance notice of any modifications proposed by the Customer to the Distribution/Interconnection Facilities. Such modifications shall be subject to the Company's and ITC's review and acceptance, which shall not be unreasonably withheld or delayed, as provided in Section 5.6, before the Customer implements such modifications. The Customer shall be responsible for the cost of such modifications.

d. The Customer shall provide the Company and ITC reasonable advance notice of any modifications to the Customer Distribution/Interconnection Facilities or the Facility by the Customer that materially changes the Customer Distribution/Interconnection Facilities or the Facility output and operational characteristics beyond those analyzed in the interconnection study. Material changes to the Facility may require a new distribution interconnection agreement and a new study.

## ARTICLE 4
## Rights of Way and Access to Premises

If applicable and to the extent necessary, the Customer agrees to furnish all necessary rights-of-way and access upon, over, under and across the Customer Distribution/Interconnection Facilities and the Facility and other electric facilities owned by the Customer for the construction and the operation, maintenance, meter reading and testing of the Distribution/Interconnection Facilities. If any part of the Distribution/Interconnection Facilities are to be installed on property other than property owned by the Customer, the Customer shall procure on the Company's behalf and at the Customer's expense all necessary permanent rights-of-way, easements and access for the construction, operation, maintenance, meter reading and testing of the Distribution/Interconnection Facilities by the Company and/or ITC.

## ARTICLE 5
## Generator Interconnection Studies and Procedures

5.1 **Interconnection Study**. The Company and/or ITC has conducted an interconnection study to determine the impact on the Company and the ITC System resulting from the interconnection of each of Customer's generators which comprise the Facility.

5.2 **Cost of Interconnection Study.** The Customer shall reimburse the Company and/or the ITC for the costs incurred in conducting the interconnection study per the terms of the interconnection study agreement.

5.3 **Facility and Equipment Design and Construction.** The Distribution/Interconnection Facilities shall meet all requirements of applicable safety codes, engineering codes, (*e.g.*, National Electrical Code and National Electrical Safety Code) and further, shall meet all requirements of any Governmental Authority having jurisdiction over such matters.

5.4 **Project Scoping.** The Parties shall meet to develop and shall mutually agree to a detailed scope of work activities under this Agreement, including design specifications, construction schedule and budget estimates.

5.5 **Construction Schedule.** The Parties shall prepare and mutually agree upon a construction schedule to complete the installation, start-up and testing of the necessary Distribution/Interconnection Facilities on or before the first Commercial Operation Date. Each Party shall use Commercially Reasonable efforts to adhere to the construction schedule. At a Party's written request, the other Party shall provide a progress report regarding the installation of the Distribution/Interconnection Facilities.

5.6 **The Company's Review, Acceptance and Inspection of Distribution/Interconnection Facilities.** The Company has the right to review, inspect and accept the design and construction of the

Distribution/Interconnection Facilities performed by the Customer (including the specifications for the protective and control equipment, improvements, additions, deletions, modifications, replacements or other changes to the Distribution/Interconnection Facilities, and the electrical drawings, one-line diagrams and similar documents depicting the Distribution/Interconnection Facilities), and to accept the as-built prints thereof. The Customer shall promptly provide the Company, when available, all such designs, specifications and drawings and other documents as they relate to the Distribution/Interconnection Facilities, and any changes thereafter. The Customer shall not be permitted to interconnect and operate its Facility in parallel with the Company until the Company has reviewed, inspected and accepted the Distribution/Interconnection Facilities.

a. With respect to any action to be taken by the Customer under this Agreement or any drawings or other documentation to be delivered by the Customer under this Agreement, where under this Agreement the Company has the right to review and accept such action, drawings or other documentation, or any changes thereto including changes to the Distribution/Interconnection Facilities design, operation and maintenance, prior to the Customer taking or finally delivering, as the case may be , such action, drawings, documentation or changes, the Company shall endeavor to provide the Customer with either written acceptance of such action, drawings, documentation or changes, or a detailed description of any objections thereto with specific actions that the Customer may take to satisfy the Company, within twenty (20) Business Days of the Company's receipt of such written proposal of action, drawings, documentation or changes. The Customer shall construct the Distribution/Interconnection Facilities in accordance with the actions, drawings, documentation, or changes accepted by the Company.

b. The Company has the right to review and accept proposed and future changes by the Customer to the settings for the Distribution/Interconnection Facilities equipment. If requested by the Company, the Customer shall provide the information needed to determine or review such equipment settings.

c. After the first Commercial Operation Date of any portion of the Facility or the Customer Distribution/Interconnection Facilities, the Customer shall not make material modifications to such facilities that may adversely affect or contribute to the degradation of the quality or reliability of transmission service on the ITC System or on the Distribution/Interconnection Facilities without the Company's and/or ITC's prior acceptance of such modifications, which shall not be unreasonably withheld or delayed. The Customer shall submit to the Company all such proposed changes to the Distribution/Interconnection Facilities as provided in Section 3.4.

d. The Customer shall submit as-built drawings of the Distribution/Interconnection Facilities within forty-five (45) Business Days of the first Commercial Operation Date. Final acceptance by the Company of the as-built drawings of the Distribution/Interconnection Facilities shall occur within ninety (90) Business Days after receipt.

e. The Company's acceptance of any designs, specifications, drawings and other documents provided by the Customer is valid only if made in writing, and is limited to the purpose of ensuring the safety, protection and control of the Distribution/Interconnection Facilities and/or the ITC System and shall not be construed as endorsement, warranty or guarantee in any manner or form of the Facility and/or the Distribution/Interconnection Facilities.

5.7 **Start-up and Testing.** The Parties shall develop and shall mutually agree to a start-up and testing program to demonstrate compliance with safety, protection and control design standards as required by this Agreement. The Parties shall coordinate completion of their respective work to support the interface and testing of the Distribution/Interconnection Facilities. Startup Testing of a generating unit operating in parallel with the Company shall not, except upon the express written consent of the Company, in its sole discretion, occur until the Company has reviewed and accepted the Distribution/Interconnection Facilities to be used in the startup testing including but not limited to; metering, relaying and other protective devices.

## ARTICLE 6
## Right to Terminate

Notwithstanding any other provision of this Agreement, the Customer may decide not to interconnect with the Company as contemplated by this Agreement and may terminate this Agreement by thirty (30) Business Days written notice to the Company provided that in the event of such a termination the Customer shall pay the Company for all costs incurred under this Agreement through the date of termination, including any reasonable and necessary costs associated with winding up the Company's activities and canceling equipment ordered pursuant to this Agreement, and any costs incurred by ITC in connection with the Company's interconnection of the Customer's Facility to the ITC System and charged to the Company.

## ARTICLE 7
## Operation and Maintenance

7.1 **Synchronous Operation.** When the Facility is interconnected with the Company and the ITC System through the Distribution/Interconnection Facilities, Customer's electric facilities shall operate in continuous synchronism. If synchronous operation of the Customer's facilities or the Distribution/Interconnection Facilities is either manually or automatically interrupted due to reasons beyond the control of either Party or due to

scheduled maintenance that has been agreed to by both Parties, the Parties shall cooperate to remove the cause of such interruption as soon as practicable and restore their respective facilities to normal operating conditions. Neither Party shall be responsible to the other for any damage or loss of revenue caused by such interruption.

7.2 **Obligation to Maintain Equipment.** The Company shall maintain the Company's Distribution/Interconnection Facilities, together with all associated equipment and appurtenances, in a suitable condition of repair at all times, at the Customer's expense, in order that the Company's Distribution/Interconnection Facilities will operate in a reliable and satisfactory manner and any reduction in the capacity of the Company's Distribution/Interconnection Facilities shall be avoided to the extent practicable. The Customer, at its expense, will be responsible for the maintenance of all facilities on its side of the Points of Interconnection with the Company's Distribution/Interconnection facilities, in accordance with applicable Company and ITC standards and Good Utility Practice, and so that such facilities will operate in a reliable and satisfactory manner and any reduction in the capacity of the Company's Distribution/Interconnection Facilities shall be avoided to the extent practicable.

7.3 **Compliance with Reliability Council Standards.** The Parties agree that the implementation of this Agreement shall comply with the applicable, material requirements for generators connected to the ITC System, in accordance with the manuals, standards and guidelines of the North American Electric Reliability Council ("*NERC*") and the East Central Area Reliability Council ("*ECAR*"), or any successor agencies assuming or charged with similar responsibilities related to the operation and reliability of the electric transmission grid. Customer agrees to comply with all Company, ITC, ECAR and NERC reliability requirements and to reimburse Company for any charges or penalties imposed on Company for violations of such requirements resulting from or relating to Customer's electric facilities, load or facilities connected to Customer's electric facilities, or Customer's actions or inactions with respect thereto.

7.4 **Synchronization of the Facility.** The Customer shall be solely responsible for properly synchronizing the Facility to the Company and ITC System under the direction of ITC and in coordination with the Company. The Company has the right to review, accept and inspect the Customer's method of synchronization.

7.5 **Energization of Distribution/Interconnection Facilities.** The Customer shall not energize any portion of the Distribution/Interconnection Facilities unless under the direction of the Company and in accordance with any applicable Company and/or ITC operating procedures.

7.6 **Facility Control, Operation and Event Analysis.** Unless otherwise agreed by the Parties, operation of the Company's Distribution/Interconnection Facilities shall be the responsibility of the Company or, if agreed to by Company and ITC, of ITC, and shall be coordinated among the Customer or its authorized representative for the Facility and the authorized representative of the Company or ITC and the ITC's control center

at the Customer's expense. The Company or ITC shall not be liable for damages or losses incurred by the Customer due to the Company's or ITC's operation of the breakers and any disconnect switch, provided, however, that the Company's Distribution/Interconnection Facilities equipment is operated in accordance with Good Utility Practice.

a. Upon the request of the Company or ITC, the Customer shall be capable of immediately operating the Customer's Distribution/Interconnection Facilities breaker(s).

b. Upon notification by the Company or ITC of a System Emergency, if the Facility is operating at the time the System Emergency occurs, the Customer shall operate the Facility at the direction of the Company or ITC, within the manufacturer's specifications, for the duration of the System Emergency, unless continued operation would adversely affect the Facility.

c. The Facility shall operate with speed governors and voltage regulators in operation in accordance with NERC and ECAR requirements whenever the Facility is operated in parallel with the ITC System. The Customer shall notify the Company or ITC whenever the Facility's voltage regulators are out of service and shall maintain voltage as prescribed by ITC and shall ensure that generator reactive power levels are within the capability of the Facility and within steady state stability limits. The Customer shall not automatically disconnect or trip the Facility or any of its generators for under-frequency operation above 59 Hertz.

d. The Parties shall cooperate in the analysis of electrical disturbances by gathering and providing access to any information relating to any disturbance on the Distribution/Interconnection Facilities, and provide information pertinent to the analysis such as fault recorders, disturbance analyzer protective relay targets, breaker operation, and sequence of event recorders.

e. The Parties shall provide periodic test data obtained during the operation of their respective Distribution/Interconnection Facilities at the following intervals:

| | |
|---|---|
| Protective relays | Three years |
| Line/bus relays | Three years |
| Generator relays | Three years |
| Breakers | Two years |
| Batteries | Quarterly |
| Revenue metering | One year |
| All other metering | Two years |

f. The Parties may agree to alter the schedule provided in (e) above. Either Party may elect to witness the testing performed by the other Party and request additional tests if warranted by Good Utility Practice.

g. Notwithstanding the above, nothing herein shall require the Customer to operate the Facility in a manner inconsistent with the equipment ratings or manufacturer's recommendations.

7.7 **Electric Energy Delivered to the Company.** Unless otherwise agreed, the electric energy delivered to the Points of Interconnection shall be in accordance with the characteristics described in this Section.

a. **Form of Electric Energy.** All electric energy delivered to the Company for delivery to the ITC System shall be in the form of three-phase, alternating current having a normal frequency of approximately 60 cycles per second, a harmonic content consistent with the requirements of The Institute of Electrical and Electronics Engineers ("*IEEE*") Standard No. 519, and otherwise in compliance with this Agreement.

b. **Flicker and Harmonics.** Electric output at the Facility shall be in accordance with the power quality standards contained in IEEE Standard No. 519, in effect from time to time. The Facility shall not introduce any distortion of Company's or ITC's waveform, telephone or power line carrier interference that is inconsistent or conflicts with IEEE Standard No. 519.

When there is demonstrated, unreasonable interference to other customers and such interference exceeds Company's or ITC's then current system standards, the Company reserves the right, at its initial expense, to install or permit ITC to install, special test equipment as may be required to perform a disturbance analysis and monitor the operation of the Facility and its control to evaluate the quality of power produced by the Facility.

In the event that there are no standards, then the applicable tariffs and rules governing electric service shall apply.

If the Facility is conclusively demonstrated to be the source of the interference, and it is demonstrated that the interference produced by the Facility exceeds Company's or ITC's standards or, when Company or ITC has no standards, generally accepted industry standards, then it shall be the responsibility of the Facility to eliminate the interference problem and to reimburse the Company for the costs of the disturbance analysis excluding the cost of the meters or other special test equipment.

c. **Frequency.** The Facility shall maintain governor systems that respond to system frequency deviations.

d. **Fault Clearing.** The Facility will utilize breakers (DIG 1,8 and B, as referenced on Exhibit A) with interrupting times of 133 milliseconds or less and primary protective relay systems such that the total clearing time performance from the inception of a fault or disturbance on the Distribution/Interconnection

Facilities or the ITC System to the de-energization of the affected equipment is less than 200 milliseconds.

e. **Stability; Stability Study.** The Facility shall be capable of stable operation for three-phase faults lasting up to 83.3 milliseconds and single phase faults lasting up to 677 milliseconds without losing synchronism with the Company and/or ITC System. Both Parties and ITC may perform periodic stability studies to verify this requirement, in which studies each Party shall cooperate. If necessary, the Parties may have to install out-of-step protection or special generator protection schemes to meet this requirement on their respective Distribution/Interconnection Facilities at their respective expense. Specifically, if the stability study shows the need for power system stabilizers, the Customer shall install and tune power system stabilizers acceptable to the Company and ITC on the Facility. In performing any such stability study, the Company and/or ITC will not evaluate the risk of unstable operation to the Facility, which assessment shall be the Customer's responsibility.

f. **Power Factor.** The Customer shall operate the Facility at a power factor of 0.90 lagging (i.e. when the Facility is supplying reactive power to the ITC System) to 0.95 leading (i.e. when the Facility is consuming reactive power from the ITC System) at the Points of Interconnection. At times when the Customer is not providing reactive power to the Company and/or ITC System under the direction of the Company or ITC Operator the customer shall maintain a power factor of 1.0 at the Points of Interconnection.

g. **Abnormal System Conditions.** The Customer is solely responsible for protecting the Facility from excessive negative sequence currents, phase reversals, loss of phase, switching surges, lightning, system faults, voltage or frequency excursions, or other abnormal system conditions.

h. **Disconnection.** Disconnect switches capable of manual operation shall be installed. The switches shall have a visibly verifiable open position and shall allow for separation of the Facility for maintenance while maintaining the continuity of the Distribution/Interconnection Facilities. The switches shall be capable of locking in the open position and shall be accessible to the Company and ITC for operation at all times. The Company and/or ITC have the right to disconnect the Facility under the following circumstances:

i. The Facility or Distribution/Interconnection Facilities adversely affect, or contribute to the degradation of, the quality or reliability of transmission service on the Distribution/Interconnection Facilities or the ITC System.

ii. Electric power from the Facility at the Points of Interconnection is outside the limits required under this Agreement and is adversely affecting, or contributing to the degradation of, the quality or reliability of

distribution service provided by the Company or transmission service provided by ITC to third parties.

iii. The Facility's equipment protecting the Company's Distribution/Interconnection Facilities or the ITC System is in such state that the equipment could cause or is causing a hazardous condition or is otherwise contributing to a System Emergency.

iv. Disconnection is necessary within ten (10) Business Days of a request of either Party, unless otherwise agreed, to verify proper operation of the Facility's equipment protecting the Company's Distribution/Interconnection Facilities or the ITC System.

v. Continued operation of the Facility poses a safety hazard to ITC personnel, the general public, the Company's Distribution/Interconnection Facilities or the ITC System.

vi. Disconnection is necessary to provide Company or ITC personnel clearance for line maintenance.

vii. A System Emergency occurs that requires the disconnection of the Facility to correct the System Emergency. If disconnection does not stabilize or improve the System Emergency, then the Company and ITC shall allow the Customer to reconnect the Customer's generators.

viii. Disconnection is required as provided in Section 7.8.

7.8 **Control Area Operations.** The Facility is located in the ITC control area. The Parties recognize that transactions scheduled under the OATT using the electric output of the Facility and the Company's or others' adjacent generators under other agreements may result in parallel flows over the Company's Distribution/Interconnection Facilities or the ITC System or systems interconnected with the ITC System, and that such flows are an indirect, unavoidable, and unintentional consequence of the physical and electrical characteristics of interconnected transmission systems. Should adverse parallel flows occur that may be caused in whole or in part by the Facility, the Company's or others' adjacent generators or both, then upon notice by ITC or Company, the Customer shall promptly undertake such action as is reasonably requested by ITC or Company, up to and including curtailment of generation on a pro rata basis with such transactions scheduled under other agreements, including, without limitation, the Company's adjacent generation not pertaining to serving its native load, as is necessary to reduce such flows to the extent necessary to overcome said adverse effect on the Company's Distribution/Interconnection Facilities or ITC System or systems interconnected with the ITC System. Should the Customer fail to comply for whatever reason with Company's or ITC's reasonable request, the Company and/or ITC may disconnect the Facility until such time as the Parties agree to a plan to correct adverse parallel flows. The Company shall not be liable for damages or losses incurred by the Customer due to the Company's or ITC's actions hereunder.

## 7.9 Obligation to Supply Reactive Power

a. Customer will supply reactive power to and absorb reactive power from the Company and the ITC System during periods of time that the Facility is connected to and operating in parallel with the Company and ITC System, in accordance with the Company or ITC's requirements (in the event of a conflict, the ITC requirements shall take precedence). The Customer shall respond to requests from the Company or ITC to increase or decrease Facility reactive power output in a manner consistent with the Customer's obligation to operate the Facility (a) in a safe and reliable manner, with applicable operational and/or reliability criteria, protocols, and directives, including those of NERC and ECAR and (b) in accordance with the provisions of this Agreement. The Facility shall generate reactive power in accordance with the voltage schedule, reactive schedule or power factor schedule prescribed by the Company or TC a minimum of one day in advance as necessary to maintain reactive support, but not in excess of the amount available from the Facility's equipment in service.

b. The Company or ITC Operator may request the Facility to change its voltage schedule, reactive schedule, or power factor schedule, whichever is applicable, or request the Facility to supply its maximum available reactive power output or absorb its maximum reactive power input (measured in MVAR) within the design limitations off the equipment in service at the time in order to enhance system security. The Company or ITC's Operator will, to the extent possible, distribute the reactive requirements to all generating facilities and other reactive compensation resources, including the Company and ITC's facilities, in the affected area. The Customer shall promptly comply with such requests made by the Company or ITC's Operator. In the event the Facility is unable to consistently maintain a reactive power capability sufficient to maintain a power factor at the Points of Interconnection within the minimum requirement, the Customer shall take appropriate steps to configure the Facility to meet such standards, including, as necessary, the installation of dynamic reactive power compensating devices subject to prior review and approval by the Company and ITC. Records of requests made by the Company or ITC's Operator, and records indicating actual responses to these requests, will be maintained by the Company ITC and subject to third party independent audit at the Customer's request and expense. The Customer will present such request for an audit to the Company or ITC no later than twelve (12) months following a request by the Company or ITC's Operator that the Facility supply or absorb its maximum available reactive power output or absorption.

c. The supply of reactive power to the Company or ITC by the Customer will be at comparable terms and conditions of other generators connected to the ITC System until such time as the Customer has filed with FERC and received

approval for rates, terms and conditions for such service, at which time such rates will be applicable. The Customer shall not be required to supply such reactive power if such reactive power has been previously sold on the market on a firm non-recallable basis. The Company and ITC will not be obligated to pay for reactive power not requested by the Company or ITC's Operator. The Company and ITC shall not be obligated to absorb or supply reactive power or energy at the Points of Interconnection if doing so interferes with transmission service on the Company's Distribution/Interconnection Facilities or the ITC System or systems interconnected with the ITC System.

d. The Customer shall operate the Facility within design limits and pursuant to the voltage and/or power factor schedules provided by the Company or ITC and within the Facility generators' capacity at a power factor of 0.90 lagging to 0.95 leading at the Points of Interconnection. At times when the Customer is not providing reactive power to the Company or ITC System under the direction of the Company or ITC Operator the customer shall maintain power factor at 1.0 at the Points of Interconnection.

7.10 Commercial Operation – The Customer will notify the Company in writing of its intention to place the Facility (or any of the Facility's generating units) into commercial operation after completion of startup testing. Commercial Operation shall not occur until the Company has reviewed and accepted Customer's Distribution/Interconnection Facilities to be used in commercial operation of the Facility (or any of the Facility's generating units) including but not limited to; metering, relaying and other protective devices.

## ARTICLE 8
## Delivery and Measurement of Electric Energy

8.1 **Voltage Level.** All electric energy delivered across the Points of Interconnection shall be at a nominal voltage of approximately 230 kV. The Customer shall not operate the Facility so as to cause voltage to occur outside the range of 101% to 106% of nominal voltage at the Points of Interconnection.

8.2 **Machine Reactive Capability.** The Facility shall have sufficient reactive capability to regulate and maintain system voltage in accordance with applicable Company, ITC, NERC and ECAR standards, as amended from time to time, without violating generator terminal voltage limitations.

8.3 **Revenue Metering.** The Company, at the Customer's expense, shall install, own, operate, maintain, test, repair and replace as needed, required revenue metering facilities to measure flows at the Points of Interconnection. The Customer may inspect, read, witness and otherwise verify the accuracy of the revenue metering facilities. The

provisions herein shall be in addition to, and shall not limit or supersede, metering requirements established in the OATT or the Company's Retail Access Service Tariff.

a. **Estimated Readings.** If for any reason the revenue metering facilities are out of service or are otherwise found to be operating inaccurately such that the amount of electric energy delivered to the ITC System cannot be accurately ascertained or computed from the readings thereof, the electric energy delivered during the period then in question shall be estimated upon the basis of the best data available and agreed upon by the Parties.

b. **Right to Audit.** The Company has the right, upon reasonable notice and at agreed upon times, to examine the Customer's records to the extent necessary to verify the accuracy of any statement, charge or computation relating to the measurement of electric energy delivered to the Company's Distribution/Interconnection Facilities, and to receive copies of such statements, charges or computations.

c. **Replacement.** If upon testing, the revenue metering facilities are inaccurate and cannot be reasonably corrected such that their accuracy is maintained over a period of time, the Company shall modify, replace or repair the revenue metering facilities as necessary to provide accurate measurements, at the Customer's expense.

d. **Access.** The Customer shall provide the Company access to the premises at all reasonable hours to install, turn on, disconnect, inspect, test, read, repair or remove the revenue metering equipment. The Customer may, at its option, have a representative witness this work. The Company will provide to the Customer or its agent access to the hourly electronic data on such revenue metering equipment via the Customer's MV 90 or other mutually agreeable retrieval system. The Customer or its agent will be responsible for the cost, if any, of equipment and technology associated with providing the data.

8.4 **Telemetering.** Output information from the Facility's generators shall be continuously telemetered from the Facility and the Points of Interconnection to the Company and ITC control center(s), including but not limited to periods of startup testing. Such telemetered information shall be maintained as confidential and shall not be disclosed except as may be required by law, regulation, court of competent jurisdiction or Governmental Authority or as may be required by entities authorized as NERC Security Coordinators. The Customer or its agent may request access to real time telemetered data via a mutually agreeable internet-based system. The Customer or its agent will be responsible for the cost, if any, of equipment and technology associated with providing the data.

a. **Data Requirements.** Telemetering of the following values is required:

° Net real and reactive power flow to the ITC System from the Facility. (Power flow to and from the Customer will be required.)

- Bus voltage at the Points of Interconnection.
- Status (normal-fail) of protective relay communication channels: A status indication of "FAIL" indicates that the communication channel used for relaying (e.g., transfer trip) is unable to perform its protective function.
- Status (open-closed) of the DIG Breakers 1,8 and B.

b. **Replacement.** If upon testing, the telemetering facilities are inaccurate and cannot be reasonably corrected such that their accuracy is maintained over a period of time, the Company shall modify, replace or repair the telemetering facilities as necessary to provide accurate measurements, at the Customer's expense.

c. **Access.** The Customer shall provide the Company access to the premises at all reasonable hours to install, turn on, disconnect, inspect, test, read, repair or remove the telemetering equipment. The Customer may, at its option, have a representative witness this work.

d. **Remote Terminal Unit.** The Company shall be responsible for the installation of all data acquisition equipment, including a remote terminal unit ("*RTU*") (output port operating in accordance with the Company's specifications and communications protocol) and related surge protection and isolation equipment needed by the Company for the establishment of the Points of Interconnection. The Customer shall be responsible for the cost of such equipment. Upon any failure of the data acquisition system, the Parties shall verbally communicate essential operating data.

8.5 **Scheduling of Generation.** The Customer shall be responsible for coordinating its generation schedule with that of its energy customers. Power and energy from the facility or over the Points of Interconnection shall be scheduled per the scheduling business practices of the Company, the Company's Retail Access Service Tariff, the OATT, and any ITC, ECAR or NERC reliability requirements, as applicable.

8.6 **Generation Imbalance Service.** Customer will be responsible for any generation imbalance charges imposed by ITC, as generally described in Schedule A, as it may be amended from time to time (a current version is attached) in connection with any differences between the energy actually delivered by the Facility and the energy scheduled to be delivered by the Facility.

## ARTICLE 9
## Billing and Payment

9.1 **Billing Procedures.** Within thirty (30) days after the first day of each month, the Company shall submit an invoice to the Customer for charges arising under Section 3.3 and 8.5 of this Agreement not otherwise previously reimbursed by the Customer, and other charges as may be provided for under this Agreement (e.g., Schedule B –

Monthly Charges). The invoice shall be paid by the Customer within twenty (20) days from the date of the invoice. All payments shall be made in immediately available funds payable to the Company, or by electronic funds to a designated bank account named by the Company. Interest shall be assessed on payments received after their due date at the lesser of (a) two (2) percent over the per annum rate of interest equal to the prime lending rate as may from time to time be published in *The Wall Street Journal* under "Money Rates" and (b) the maximum rate permitted by applicable law, said interest to be calculated from the due date of the bill to the date of payment.

9.2 **Billing Disputes.** In the event the Customer disputes a bill or portion thereof, or disputes any other claim or adjustment, the Customer shall pay the bill when due in the amount rendered and provide the Company with written notice of the objection at that time. Upon receipt of the Customer's payment, the Company will submit the matter to the dispute resolution procedures provided under this Agreement. If it is subsequently determined or agreed that an adjustment to the bill is appropriate, the Company shall issue a revised bill. If the revised bill requires the Customer to make additional payment, then the Customer shall pay the additional amount within ten (10) Business Days of the Customer's receipt of the revised bill. If the revised bill requires the Company to refund all or any portion of a payment, then the Company shall refund to the Customer the appropriate amount within ten (10) Business Days of the issuance of the revised bill. Any over- or under-payment shall bear interest at the rate provided in this Article and shall be assessed from the time of said over/under-payment to the date of issuance of the revised bill or refund.

9.3 **Audit Rights.** Upon reasonable notice to the Company, the Customer may from time-to-time audit the books and records of the Company related to all charges for costs invoiced to the Customer by the Company.

## ARTICLE 10
## Communications

Following the first Commercial Operation Date, the Customer shall maintain mutually satisfactory operating communications for 24-hour, seven days a week coverage with the Michigan Electric Power Coordination Center (MEPCC) and the ITC System Operations Center (SOC), or other operations center designated by the Company. Twenty four hour contact is not necessary during periods when the generation is not operating or not operating in parallel with the ITC System. Both Parties will notify the other with any new contact numbers when appropriate.

10.1 The Customer shall provide the following information to the Real Time Operations Desk at the MEPCC (phone number 734-665-3425).

- Generation schedules and changes to generation schedules according to Section 8.5

- Notification of unit startup or shutdown
- Other information according to Section 7.8

10.2 The Customer shall provide the following information to the Real Time Operations Desk at the SOC (phone number 313-235-9528).

- Coordination of unit startup or shutdown
- Coordination of reactive power according to Section 7.6 (b)
- Operation of breakers according to Section 7.6

10.3 The Customer's agent is [to be provided by Customer]. The contact number for the Customer's agent is [to be provided by Customer]. The Customer's Facility control room number is [to be provided by customer**]**.

## ARTICLE 11
## Continuity of Service

11.1 **Curtailment of Distribution/Interconnection Facilities.** The Company and the Customer shall utilize their reasonable efforts to (a) cause curtailment, interruption or reduction of service of the Distribution/Interconnection Facilities, if any, to be made during non-peak load periods, (b) mitigate the extent and duration of any disconnection, curtailment, interruption or reduction of service of the Distribution/Interconnection Facilities, and (c) provide any information reasonably requested by either Party related to such event occurring on their respective facilities.

11.2 **Notice of Curtailment of Distribution/Interconnection Facilities.** Except in the case of a System Emergency, the Company and the Customer shall give one another prior notice, as may be reasonable under the circumstances, of any curtailment, interruption or reduction of service of their respective Distribution/Interconnection Facilities. Such notice shall give the reason for its occurrence and its probable duration.

## ARTICLE 12
## Disputes

12.1 **Technical Disputes.**

a. If the Parties cannot agree on matters related to any dispute or controversy of a primarily technical nature under Section 12.1 and the Parties do not resolve the dispute within ten days of either Party expressing its disagreement with the position of the other Party to such matters, a committee consisting of two officers or delegates of each Party shall meet and attempt in good faith to resolve such dispute. If such committee does not resolve the dispute within ten days following their initial meeting, then either Party may nominate a single third

party engineer (the "Third Party Engineer") that it proposes to resolve the dispute. The other Party shall, within ten days thereafter, notify the initiating Party if such person is unacceptable, whereupon the Parties shall meet to discuss and agree upon a person to be the Third Party Engineer. If the Parties cannot agree within ten days thereafter, the responding Party shall nominate a person to be the Third Party Engineer, whereupon the two nominated Third Party Engineers shall agree on a third person, who shall be the Third Party Engineer to resolve the dispute.

b. Within ten (10) Business Days of the designation of a Third Party Engineer, each of the Customer and the Company shall submit to the Third Party Engineer a notice (a "Position Notice") setting forth in detail such Party's position in respect of the issues in dispute. Such Position Notice shall include supporting documentation, if appropriate.

c. The Third Party Engineer shall complete all proceedings and issue its decision with regard to the issues in dispute as promptly as reasonably possible, but in any event within ten (10) Business Days of the date on which both Position Notices are submitted unless the Third Party Engineer reasonably determines that additional time is required in order to give adequate consideration to the issues raised. In such case the Third Party Engineer shall state in writing his reasons for believing that additional time is needed and shall specify the additional period required, which period shall not exceed ten (10) days without the Parties' agreement.

d. In resolving a dispute, the Third Party Engineer shall consider all facts and circumstances it deems reasonable given the nature of the dispute.

e. The decision of the Third Party Engineer shall be final and non-appealable. The Parties shall each bear one-half of all reasonable costs incurred by the Third Party Engineer in connection with a dispute under this Section 12.1.

## ARTICLE 13
## Force Majeure

13.1 **Force Majeure.** A Force Majeure event is an event or circumstance that materially and adversely affects a Party's ability to perform its obligations under this Agreement in whole or in material part, to the extent the same (a) is beyond the reasonable control of, and not due to the fault or negligence of the affected Party or its contractors or subcontractors, and (b) could not have been prevented, overcome or remedied in whole or in part by the affected Party through the exercise of diligence and reasonable care. Such events or circumstances may include, to the extent the above conditions are satisfied, drought, flood, earthquake, storm, fire, lightning, epidemic, war, riot, civil disturbance, sabotage, explosions, strikes or labor disputes, the existence of hazardous materials, the existence of subsurface conditions that could not reasonably have been

discovered with the exercise of prudent engineering practices, unavailability of energy, orders or judgments of any Governmental Authority, the absence, suspension, termination, interruption, denial or failure of renewal of any permit, or any relevant Change in Law. Force Majeure includes the failure of a contractor to furnish labor, services, materials or equipment in accordance with its contractual obligations, provided such failure is itself due to an event of Force Majeure. Notwithstanding the foregoing, an event of Force Majeure shall not include (i) equipment failures due to normal wear and tear or defects in manufacture, engineering, design or construction, operation or maintenance thereof, or (ii) any strike or labor dispute involving the employees of a contractor or the employees of any construction subcontractor employed by either Party at the Facility unless such strike or labor dispute is, in fact, a violation of the contractor's project labor agreement.

13.2 **Notice.** If either Party's ability to perform its obligations under this Agreement is affected by an event of Force Majeure, such Party claiming such inability shall (i) promptly notify the other Party of such event and its cause and confirm the same in writing within five (5) Business Days of its discovery, (ii) promptly supply such available information about the event and its cause as may be reasonably requested by the other Party and (iii) initiate efforts to remove the cause of the event or to lessen its effect.

13.3 **Effect of Force Majeure.**

a. Upon providing notice pursuant to Section 13.2, a Party affected by a Force Majeure event shall be released from liability for the performance of its obligations under this Agreement, except for the obligation to pay amounts due and owing hereunder, and only for the period that its performance of such obligations is prevented by the Force Majeure event.

b. During the period that the performance by one of the Parties of its obligations under this Agreement has been suspended by reason of a Force Majeure event, the other Party may likewise suspend the performance of all or part of its obligations hereunder to the extent such suspension is Commercially Reasonable under the circumstances.

13.4 **Scope.** The suspension of performance under this Article 13 shall be of no greater scope and no longer duration than that which is necessary. The excused Party shall use its reasonable best efforts to remedy with all reasonable dispatch its inability to perform. Notwithstanding the foregoing, no Party shall be required to settle any strike or meet the demands of any union to remedy its inability to perform as a result of a Force Majeure event.

## ARTICLE 14
## Indemnification and Limitation on Liability

14.1 **Indemnification by Customer.** The Customer will indemnify, defend and hold the Company and its officers, agents, representatives and employees harmless from any and

all liability, claims, demands, costs, judgments, loss or damage, including attorney fees, resulting from the installation, maintenance, possession or operation of the Facility and any non-Company facilities used by the Customer, except those caused by the sole negligence of the Company. The Customer's indemnification shall not include damages and injuries occurring on the ITC System unless the damage or injuries would not have occurred but for the operation of the Facility or is caused by the sole negligence of the Customer.

14.2 **Indemnification by the Company.** The Company shall indemnify, defend and hold the Customer and its officers, agents, representatives and employees harmless from any and all liability, claims, demands, costs, judgments, loss or damage, including attorney fees, resulting from damage or injuries occurring on the Company's Distribution/Interconnection Facilities unless the damage or injuries on such facilities would not have occurred but for the operation of the Facility or is caused by the sole negligence of the Customer.

14.3 **LIMITATION ON LIABILITY.** NEITHER PARTY SHALL BE LIABLE TO THE OTHER FOR ANY INDIRECT, INCIDENTAL, CONSEQUENTIAL, PUNITIVE, MULTIPLE, OR EXEMPLARY DAMAGES OR LOST PROFITS ARISING OUT OF, DUE TO, OR IN CONNECTION WITH EITHER PARTY'S PERFORMANCE OR NONPERFORMANCE UNDER THIS AGREEMENT, OR ANY OF ITS OBLIGATIONS HEREIN, WHETHER BASED ON CONTRACT, TORT, STRICT LIABILITY, WARRANTY OR OTHERWISE.

14.4 **Right to Suspend Performance.** After the Commercial Operation Date, either Party shall have the right to request further assurance from the other Party that the other Party's obligations under this Agreement are being met or are being performed. If the Party so requested does not provide further assurance within five (5) days after the request therefor, the requesting Party may without liability, suspend its obligations hereunder until it receives such assurance. The requesting Party may not suspend performance of its obligations while such dispute is pending but, if the requesting Party is the Company, the Company may otherwise disconnect the Facility as permitted under the terms of this Agreement.

## ARTICLE 15
## Assignment

15.1 This Agreement shall be binding upon and inure to the benefit of the Parties and their successors and permitted assigns.

15.2 Either Party may assign this Agreement to one or more of its Affiliates, provided that, without the consent of the other Party, (i) any such transfer shall not relieve the assigning Party of its obligations hereunder, and (ii) the assigning Party provides assurance to the other Party of the adequate performance by its assignee of its obligations hereunder.

15.3 Either Party may assign this Agreement to a third party not an Affiliate, provided that (i) such Party transfers all its interest in this Agreement, (ii) the transferee agrees to be

bound by the obligations set forth in this Agreement, and (iii) the other Party has consented to such transfer, which consent shall not be unreasonably withheld. Any such transfer shall relieve the assigning Party of its obligations hereunder. Either Party may consider, in determining whether to reasonably withhold consent, factors which include the potential transferee's net worth, technical expertise, and extent and quality of experience in the business of the independent generation of electricity.

15.4 Either Party may assign this Agreement as collateral security to a lender but any exercise by the lender of its rights with respect to this Agreement shall be subject to compliance with the requirements of Section 15.3.

15.5 Any purported transfer by a Party in violation of the foregoing shall be void, and need not be recognized by the other Party.

## ARTICLE 16
## Other Provisions

16.1 **Governing Law.** This Agreement shall be governed by the laws of the State of Michigan without regard to principles of conflicts of laws.

16.2 **Headings Not Affecting Meaning.** The descriptive headings of the various Sections and Articles of this Agreement have been inserted for convenience of reference only and shall in no way modify or restrict any of the terms and provisions hereof.

16.3 **Amendments.** This Agreement may be amended by and only by a written instrument duly executed by each of the Parties hereto.

16.4 **Waiver.** Any waiver at any time by either Party of its rights with respect to a default under this Agreement, or with respect to any other matters arising in connection with this Agreement, shall not be deemed a waiver with respect to any subsequent default or other matter.

16.5 **Notices.** Any notice, demand or request required or permitted to be given by either Party to the other and any instrument required or permitted to be tendered or delivered by either Party to the other may be so given, tendered or delivered, as the case may be, by depositing the same in any United States Post Office Box with postage prepaid, for transmission by certified or registered mail, addressed to the Party, or personally delivered to the Party by hand or overnight delivery service, or by facsimile transmission followed by one of the preceding forms of delivery at the address set out below or such other address identified by the Party to the other Party in writing:

**To the Company**:

The Detroit Edison Company
2000 Second Ave
Detroit, Michigan 48226
Tel. No. (313) 235-8000
Fax No. (313) 235-8500

With a copy to General Counsel at the same address.

**To the Customer**:

Dearborn Industrial Generation, L.L.C.
Fairlane Plaza South
330 Town Center Drive, Suite 1000
Dearborn, MI 48126
Attention: Project Manager
Phone No. (734) **[**__to be provide by customer_____**]**
Fax. No. (734) 668-9739

With a copy to General Counsel at the same address.

16.6 **Entire Agreement.** This Agreement constitutes the entire agreement and understanding between the Parties hereto with reference to the subject matter hereof and supersedes all prior oral and written understandings and agreements between the Parties.

16.7 **No Third Party Beneficiaries.** This Agreement is for the sole benefit of the Parties hereto and ITC and no other person or entity shall be entitled to rely upon or receive any benefit from this Agreement or any provision hereof.

16.8 **Regulatory Approval.** This Agreement is subject to valid laws, orders, rules and regulations of duly constituted authorities having jurisdiction. Both Parties, upon any changes or conditions imposed by any Governmental Authority, any of which are reasonably unacceptable to either Party, shall negotiate in good faith an amendment to this Agreement that preserves the rights of the Parties under the Agreement and satisfies the change or condition imposed by such Governmental Authority. The failure to negotiate an amendment shall be cause for termination of the Agreement upon thirty days' written notice by the non-consenting Party.

16.9 **Counterparts.** This Agreement may be executed in multiple original counterparts and any counterpart hereof having attached thereto the signatures of both Parties hereto (whether on one page or on separate pages) shall be deemed a fully executed original.

## ARTICLE 17
## Insurance

17.1 **Customer's Insurance.** Customer, at its expense, shall procure and maintain in effect during the Term of this Agreement, with insurance companies authorized to transact insurance in the State of Michigan and reasonably acceptable to the Company, policies of insurance providing, at a minimum, the coverage and limits specified, and complying with the requirements stated below:

17.1.1 Worker's Compensation in statutory amounts and Employer's Liability with a minimum limit of $1,000,000 per person.

17.1.2 Commercial General Liability Insurance on an occurrence basis, with the following coverage and limits:

| | |
|---|---|
| General Aggregate | $1,000,000 |
| Products-Completed Operations-Aggregate | $1,000,000 |
| Personal & Advertising Injury | $1,000,000 |
| Each Occurrence | $1,000,000 |
| Fire Damage (any one fire) | $50,000 |
| Medical Expense (any one person) | $5,000 |

17.1.3 Business Automobile Liability covering autos of Customer, including owned, hired and non-owned autos, for Bodily Injury and Property Damage with a combined single limit of $1,000,000 each occurrence.

17.1.4 Excess Liability in Umbrella Form with a limit of $4,000,000 each occurrence, $4,000,000 Aggregate.

17.1.5 By signing this Agreement, Customer thereby waives all rights of subrogation against the Persons Indemnified with respect to any claim or loss payable or paid under each of the policies set forth in Sections 17.1.2, 17.1.3, and 17.1.4 above.

17.1.6 Customer's insurance shall be primary insurance with respect to the operations, maintenance, work, or services on the Facility and insurance of Persons Indemnified shall be excess of the Customer's insurance and shall not contribute with it.

17.1.7 To the extent that Customer utilizes deductibles or self-insurance in connection with the insurance coverage required herein, all such deductible and self-insured amounts shall be for the account and expense of Customer and shall not be considered as costs or fees provided for in this Agreement.

17.2 **Notice and Certification.** Each of the above required policies shall contain a provision whereby the insurance carrier shall endeavor to notify the Company at least thirty (30) days prior to the effective date of cancellation of any of said policies. Customer shall submit to the Company a Certificate, signed by an authorized representative of the insurance carrier, listing the policies, coverage and limits and certifying that the said policies shall be in effect for the time periods stated in the Certificate. The obligations for Customer to procure and maintain insurance shall not be construed to waive or restrict other obligations.

IN WITNESS WHEREOF, the Parties hereto have caused this Agreement to be duly executed by their duly authorized officers effective as of the day and year first written above.

**DEARBORN INDUSTRIAL GENERATION, L.L.C.**

By: _____
Name: _____
Title: _____

**THE DETROIT EDISON COMPANY**

By: _____
Name: _____
Title: _____

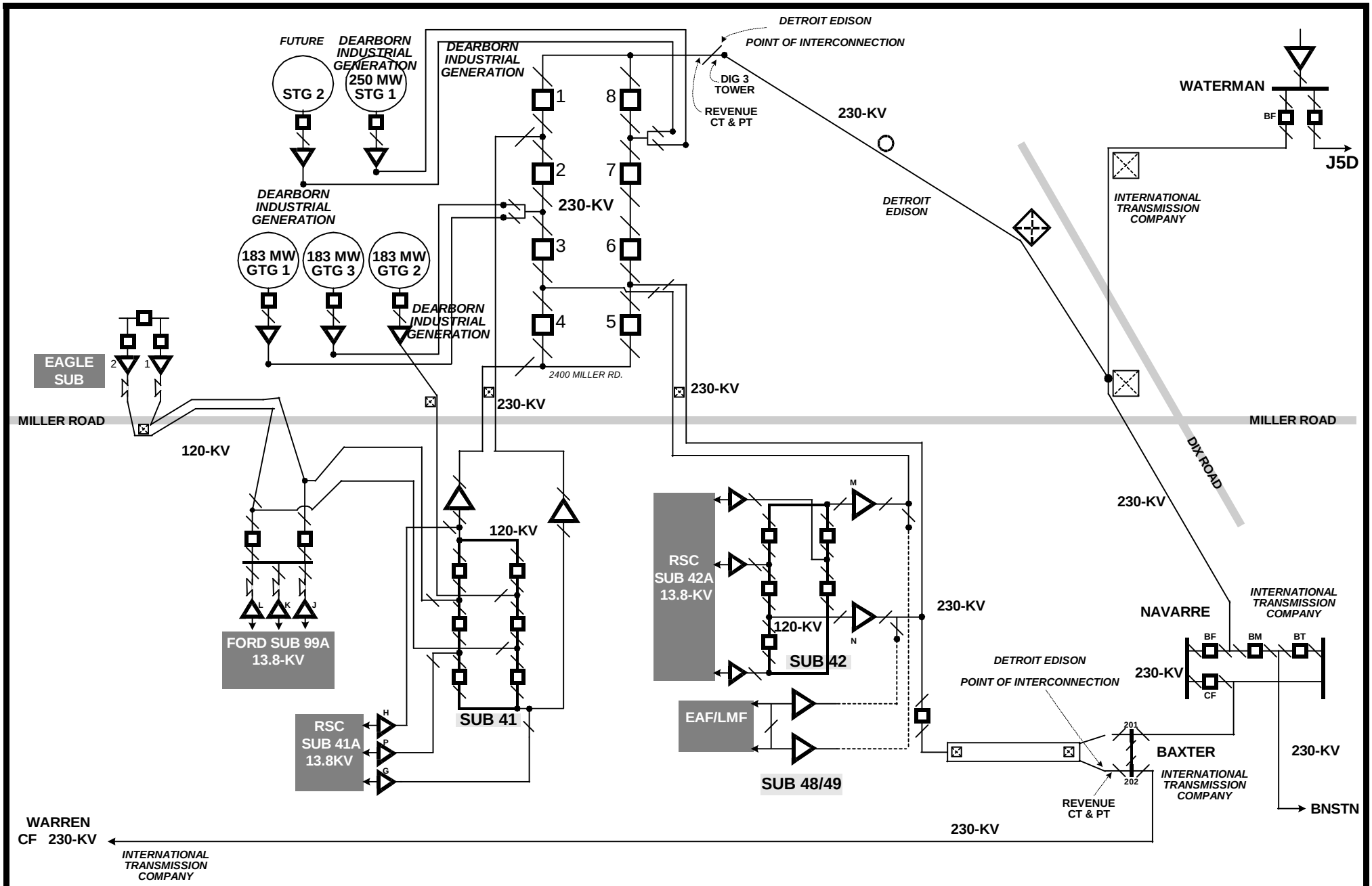
FUTURE
DEARBORN INDUSTRIAL GENERATION
250 MW
STG 1
STG 2
DEARBORN INDUSTRIAL GENERATION
DETROIT EDISON
POINT OF INTERCONNECTION
DIG 3 TOWER
REVENUE CT & PT
230-KV
WATERMAN
BF
J5D
INTERNATIONAL TRANSMISSION COMPANY
DETROIT EDISON
DEARBORN INDUSTRIAL GENERATION
183 MW GTG 1
183 MW GTG 3
183 MW GTG 2
DEARBORN INDUSTRIAL GENERATION
1
2
3
4
5
6
7
8
230-KV
2400 MILLER RD.
EAGLE SUB
2
1
MILLER ROAD
230-KV
230-KV
MILLER ROAD
DIX ROAD
120-KV
120-KV
FORD SUB 99A
13.8-KV
L
K
J
SUB 41
RSC
SUB 41A
13.8KV
H
P
G
RSC
SUB 42A
13.8-KV
M
N
120-KV
SUB 42
230-KV
EAF/LMF
SUB 48/49
NAVARRE
INTERNATIONAL TRANSMISSION COMPANY
BF
BM
BT
CF
DETROIT EDISON
POINT OF INTERCONNECTION
230-KV
201
202
BAXTER
INTERNATIONAL TRANSMISSION COMPANY
REVENUE CT & PT
230-KV
BNSTN
WARREN
CF 230-KV
230-KV
INTERNATIONAL TRANSMISSION COMPANY

# EXHIBIT A

# Exhibit B

# CIAC Facilities Cost and O&M Cost

## Company Distribution/Interconnection Facilities

### Radial Tap off Navarre – Waterman line *

| | |
|---|---|
| 230 kV line | $ 700,000.00 |
| Metering, Relaying ,etc. | $ 440,000.00 |
| Monthly O&M Charge | $ 15,200.00 |

### Radial line from Baxter *

| | |
|---|---|
| 230 kV line | $ 200,000.00 |
| Metering, Station ,etc. | $ 80,000.00 |
| Monthly O&M Charge | $ 3,733.00 |

## ITC System Improvements *

| | |
|---|---|
| Warren 120 kV circuit breaker | $130,000.00 |
| Monthly Charge: | $ 650.00 |

## Startup/Black Start Charge

| | |
|---|---|
| Customer synchronizes | $100.00 per occurrence |
| ITC synchronizes | $200.00 per occurrence |
| ITC Operate Customer's breaker - | $200.00 per occurrence |

## Administrative and Scheduling Charge

| | |
|---|---|
| Monthly Charge- | $1500.00 |

* The Interconnection modifications are still under construction; these cost are preliminary and subject to final verification; these charges will be applicable upon interconnected operations and will be subject to true-up in accordance with Article 9 of the Agreement.

# Schedule A

# Generation Imbalance Service

Generator imbalance is the difference between the schedule from the Customer's Facility in an hour and the amount of energy actually generated in that hour by the Customer's Facility.

For each hour in which there is generator imbalance, measured in kWh, the Customer shall be billed or credited as follows:

*Generator Imbalance Within the Deviation Band (Within 1%, plus or minus):*

If ITC provides energy, the Customer shall pay ITC for 100% of ITC's cost for supplying such energy in the hour the imbalance occurred multiplied times the amount of the generator imbalance in that hour.

If ITC receives energy, ITC shall credit the Customer 100% of ITC's savings for receiving such energy in the hour the imbalance occurred multiplied times the amount of the generator imbalance in that hour.

*Generator Imbalance Outside the Deviation Band (from 1 to 5% plus or minus):*

If ITC provides energy, the Customer shall pay ITC the greater of $100/MWh on-peak ($50/MWh off peak) or 110% of ITC's cost for supplying such energy in the hour the imbalance occurred multiplied times the amount of the generator imbalance in that hour.

If ITC receives energy, ITC shall credit the Customer 90% of ITC's savings for receiving such energy in the hour the imbalance occurred multiplied times the amount of the generator imbalance in that hour.

*Generator Imbalance Outside the Deviation Band (greater than 5% plus or minus):*

If ITC provides energy, the Customer shall pay ITC the greater of $100/MWh on-peak ($50/MWh off peak) or 150% of ITC's cost for supplying such energy in the hour the imbalance occurred multiplied times the amount of the generator imbalance in that hour.

If ITC receives energy, ITC shall credit the Customer 75% of ITC's savings for receiving such energy in the hour the imbalance occurred multiplied times the amount of the generator imbalance in that hour.

*Size of Generator Imbalance Deviation Band:*

In recognition of the fact that small generator imbalance is unavoidable, a deviation band of +/- 1.00 % of scheduled output is established for Generation Imbalance Service.

Generation Imbalance Service is an as-available service and ITC reserves the right to discontinue its provision when it is resource deficient or the ITC System is in low load conditions. The Customer will be responsible for taking necessary actions to eliminate its generator imbalances under these conditions when notified by ITC.

ITC and the Customer agree that in the event that ITC files, and the FERC accepts a tariff for Generation Imbalance Service then the provisions of this Schedule A will no longer apply and shall be superseded by the filed tariff.

On-peak and Off-peak hours will be those as defined in the OATT.

**STATE OF MICHIGAN**

**BEFORE THE MICHIGAN PUBLIC SERVICE COMMISSION**

| | | |
|---|---|---|
| In the matter of the application of THE DETROIT EDISON COMPANY for approval of an unexecuted Distribution Interconnection Agreement associated with the "Rouge Complex" and Dearborn Industrial Generation, L.L.C. | ) ) ) ) ) ) ) | Case No. U-12866 |

**PROOF OF SERVICE**

STATE OF MICHIGAN )
) ss
COUNTY OF WAYNE )

DORIS J. HILL, being duly sworn deposes and says that on the 12th day of March, 2001 she served a copy of The Detroit Edison Company's **APPLICATION FOR IMMEDIATE *EX PARTE* APPROVAL OF UNEXECUTED DISTRIBUTION INTERCONNECTION AGREEMENT** upon the parties listed on the attached Service List, a copy of which is attached, by electronic mail and by depositing properly addressed sealed and stamped envelopes into the United States mail by first class.

DORIS J. HILL

Subscribed and sworn to before
me this 12th day of March, 2001

MELANIE A. CHAMBERLIN
Notary Public, Wayne County, MI
My Commission Expires Aug. 3, 2001

**SERVICE LIST**
**MPSC CASE NO. U-12866**

**Attorney for the Michigan Public Service Commission Staff**
David A. Voges, Esq.
Michigan Public Service Commission
6545 Mercantile Way
Suite 15
Lansing, Michigan 48911

**Attorney for CMS Enterprises Company**
Anthony Morrow
330 Town Center Drive
Suite 1100
Dearborn, Michigan 48126