The Detroit Edison Company
2000 2nd Ave., Detroit, MI 48226-1279

Detroit Edison

A DTE Energy Company

Jon P. Christinidis
Staff Attorney
(313) 235-7706

April 4, 2001

Ms. Dorothy Wideman
Executive Secretary
Michigan Public Service Commission
6545 Mercantile Way
Lansing, MI 48911

Re: Supplement to Application For Immediate Ex Parte Approval of Unexecuted Distribution Interconnection Agreement MPSC Case No. U-12866

Dear Ms. Wideman:

Please find enclosed for filing with the Commission an original and four copies of The Detroit Edison Company's **Supplement to Application For Immediate Ex Parte Approval of Unexecuted Distribution Interconnection Agreement** in the above captioned matter, along with Proof of Service.

Very truly yours,

Jon P. Christinidis

JPC/dj
Enclosures

SERVICE LIST
MPSC CASE NO. U-12866

Attorney for the Michigan Public Service Commission Staff
David A. Voges, Esq.
Michigan Public Service Commission
6545 Mercantile Way
Suite 15
Lansing, Michigan 48911

Attorney for CMS Enterprises Company
Anthony Morrow
330 Town Center Drive
Suite 1100
Dearborn, Michigan 48126

STATE OF MICHIGAN

BEFORE THE MICHIGAN PUBLIC SERVICE COMMISSION

In the matter of the application of THE DETROIT EDISON COMPANY for approval of an unexecuted Distribution Interconnection Agreement associated with the "Rouge Complex" and Dearborn Industrial Generation, L.L.C.	)))))))	Case No. U-12866

PROOF OF SERVICE

STATE OF MICHIGAN)
) ss
COUNTY OF WAYNE)

DORIS J. HILL, being duly sworn deposes and says that on the 4th day of April, 2001 she served a copy of The Detroit Edison Company's **SUPPLEMENT TO APPLICATION FOR IMMEDIATE *EX PARTE* APPROVAL OF UNEXECUTED DISTRIBUTION INTERCONNECTION AGREEMENT** upon the parties listed on the attached Service List, a copy of which is attached, by electronic mail and by depositing properly addressed sealed and stamped envelopes into the United States mail by first class.

Doris J. Hill
DORIS J. HILL

Subscribed and sworn to before
me this 4th day of April, 2001

Sandra Lee Kussavage
SANDRA LEE KUSSAVAGE
NOTARY PUBLIC MACOMB CO., MI
MY COMMISSION EXPIRES Dec 02, 2001
Acting in Wayne County, MI

STATE OF MICHIGAN

BEFORE THE MICHIGAN PUBLIC SERVICE COMMISSION

In the matter of the application of THE DETROIT EDISON COMPANY for approval of an unexecuted Distribution Interconnection Agreement associated with the "Rouge Complex" and Dearborn Industrial Generation, L.L.C.	)))))))	Case No. U-12866

SUPPLEMENT TO APPLICATION FOR IMMEDIATE *EX PARTE* APPROVAL OF UNEXECUTED DISTRIBUTION INTERCONNECTION AGREEMENT REQUESTING APPROVAL OF SHORT-TERM START-UP TESTING AND PARALLEL OPERATION INTERCONNECTION AGREEMENT

NOW COMES THE DETROIT EDISON COMPANY, by and through its attorneys, and pursuant to the Rules of Practice and Procedure Before the Commission (R. 460.17101 et Seq.) and the Michigan Administrative Procedures Act (MCL 24.201 et Seq.), files this Supplement to its Application for immediate *ex parte* approval of an unexecuted distribution interconnection agreement (the "Distribution Interconnection Agreement") between The Detroit Edison Company ("Detroit Edison" or the "Company") and Dearborn Industrial Generation, L.L.C. ("DIG"), which Application Detroit Edison filed with the Michigan Public Service Commission ("MPSC") on March 12, 2001. Subsequent to the filing of Detroit Edison's March 12, 2001 Application, DIG has accepted and executed a short-term Start-Up Testing and Parallel Operation Interconnection Agreement (the "Start-Up Agreement"), which Detroit Edison submits to the MPSC as a supplement to its March 12, 2001 Application and for which it requests the MPSC's immediate *ex parte* approval.

1. For the sake of brevity, Detroit Edison incorporates by reference and adopts as if fully restated herein paragraphs 1 through 10 of its March 12, 2001 Application. Those

paragraphs describe Detroit Edison and DIG and provide a description of the facts and circumstances which have given rise to the current proceeding and the efforts of Detroit Edison to accommodate DIG's desire to enter into a long-term Distribution Interconnection Agreement.

2. As detailed in its March 12, 2001 Application, the Distribution Interconnection Agreement provides for the interconnection of distribution equipment owned by Detroit Edison with the distribution and generation equipment owned and/or controlled by DIG (the "Facility") and for the treatment of retail power consumption at the Ford Motor Company Rouge industrial complex site. Detroit Edison submitted the Distribution Interconnection Agreement to the MPSC in unexecuted form because Detroit Edison and DIG were unable to reach agreement on the terms and conditions of a long-term Distribution Interconnection Agreement and DIG was then unwilling to execute a short-term interconnection arrangement. Notwithstanding, Detroit Edison wished to facilitate interconnection for purposes of allowing DIG to commence startup testing of the Facility. Detroit Edison and DIG have since reached agreement on the limited, short-term Start-up Agreement, which the parties have executed for the limited purpose of facilitating startup testing of the Facility without delay and without prejudice to the parties' positions with respect to the long-term Distribution Interconnection Agreement.

3. The Start-Up Agreement provides for the interconnection of distribution equipment owned by Detroit Edison with the distribution and generation equipment owned and/or controlled by DIG for purposes of permitting DIG to commence startup testing of the Facility. The Start-Up Agreement was executed on March 15, 2001, and will terminate by its terms not later than May 15, 2001, unless earlier terminated, cancelled or superseded by a long-term distribution and interconnection agreement. To the best of Detroit Edison's knowledge and

belief, such startup testing has not yet commenced and the DIG generation and distribution equipment has not been synchronized to the Detroit Edison electrical distribution system.

4. Detroit Edison has, at all times, acted in good faith to facilitate the continued and timely construction of the DIG facilities and has attempted, in good faith, to reach a mutually acceptable interconnection arrangement with DIG. Detroit Edison's execution of the Start-Up Agreement to facilitate start-up testing is fully consistent with its good faith efforts to further the development of the DIG project.

5. The Start-Up Agreement is a Special Contract under Michigan law because it involves the provision of services not specifically covered by Detroit Edison's filed rules and rate schedules. The MPSC has the authority to approve Special Contracts pursuant to MCL 462.11 and R. 460.2031, which provides,

> When a special contract is entered into by a utility for the sale of its products or services in a manner or at a rate not specifically covered by the filed rules and rate schedules, an application for approval shall be filed with the commission. A conformed copy of such contract, as approved by the commission, shall be filed within 30 days after approval. (R. 460.2031).

6. Detroit Edison believes that because the Start-Up Agreement addresses the same generation site, and generally governs the same types of services as the Distribution Interconnection Agreement, and because the Start-Up Agreement is of a limited, short-term nature, consideration of the Start-Up Agreement in this case, rather than commencing another case, is appropriate.

7. As with the March 12, 2001 Application regarding the long-term Distribution Interconnection Agreement, Detroit Edison has filed a copy of the Start-Up Agreement with FERC as well, and has requested FERC to disclaim jurisdiction over it.

8. In order to assure the appropriate recovery of securitization, stranded cost, transition, and distribution charges of the Company, and to facilitate the generation testing desired by DIG in an efficient and expeditious manner, Detroit Edison respectfully requests that the MPSC immediately review and approve the attached executed Start-Up Agreement between Detroit Edison and DIG, thereby assuring the appropriate recovery of Detroit Edison charges from DIG during the term of the Start-Up Agreement and facilitating an increase of independent, non-utility generation in Michigan.

9. Immediate approval of the attached executed Start-Up Agreement will further certain fundamental purposes of 2000 PA 141, including,

> "To encourage the development and construction of merchant plants." [Sec. 10(2)(c)], and
>
> "[T]o promote financially healthy and competitive utilities in this state." [Sec. 10(2)(e)].

Further, the relief requested by Detroit Edison is consistent with the MPSC's February 5, 2001, order in MPSC Case No. U-12485 regarding the interconnection of merchant plants.

10. Approval of the attached Start-Up Agreement will not result in any increase in any rates or charges by Detroit Edison to retail electric customers and therefore may be accomplished without notice or hearing as provided for by MCL 460.6a.

WHEREFORE, The Detroit Edison Company respectfully requests that the MSPC immediately approve in its entirety, on an *ex parte* basis, and give immediate effect to, the attached executed Start-Up Testing and Parallel Operation Interconnection Agreement.

THE DETROIT EDISON COMPANY



Jon P. Christinidis (P 47352)
Legal Department
2000 Second Avenue, 688 WCB
Detroit, Michigan 48226
(313) 235-7706

Dated: April 4, 2001

STARTUP TESTING AND PARALLEL OPERATION INTERCONNECTION AGREEMENT

THIS AGREEMENT, dated March 14, 2001, by and between The Detroit Edison Company, 2000 Second Avenue, Detroit, Michigan 48226 (hereinafter "Detroit Edison" or "Company"), and Dearborn Industrial Generation, L.L.C., 2400 Miller Rd., Dearborn, Michigan (hereinafter "Customer"). Company and Customer may be referred to as a "Party," and collectively as the "Parties."

WITNESSETH:

WHEREAS, the Customer desires to test its 250 MW steam turbine and, through its affiliate or agent, desires to sell electric test energy from that 250 megawatt steam turbine generator and associated equipment, including interconnection facilities, owned by Customer, all of which equipment is described in Exhibit B ("Facility"), which is incorporated by reference as if fully set forth herein;

WHEREAS, the Company is willing to interconnect and operate its electrical system in parallel with Customer in order to facilitate the timely testing of Customer's project only, and subject to certain terms and conditions; and

WHEREAS, the Parties agree that this Agreement shall be in effect for not longer than the term specified herein to permit the Customer to test its Facility, and the terms and conditions of service under this Agreement shall be binding on the Parties only during the term and shall not obligate Company to offer Customer interconnection services for a longer term under those terms and conditions.

NOW, THEREFORE, in consideration of the promises and the mutual covenants hereinafter set forth, the parties agree as follows:

1. CONDITIONS PRECEDENT

1.1 This Agreement only covers equipment as shown on Exhibits A and B and does not cover additional generation equipment, load or modifications to the Facility. Interconnected operation of other equipment is not permitted under this Agreement. Furthermore, this Agreement permits the operation of the equipment listed in Exhibits A and B for purposes of testing that equipment and selling electric test energy only and shall not entitle Customer, its agents or affiliates to engage in further or additional commercial activity.

1.2 The Customer shall execute an appropriate Rider No. 3 contract (standby service) from the Company and comply with all terms and conditions

contained in Rider No. 3 pertaining to parallel operation as same may change from time to time. The current Rider No. 3 is attached as Exhibit C.

2. TRANSMISSION AND SCHEDULING

2.1 The scheduling and delivery of electric test energy generated by the Facility shall only occur pursuant to appropriate transmission service arrangements under the International Transmission Company (ITC) Open Access Transmission Tariff. This Agreement does not promise or warrant the availability of transmission service or provide for the use of the ITC transmission system.

2.2 Generation Imbalances will be assessed pursuant to the terms of Schedule A as applicable.

3. TERM

3.1 This Agreement shall be effective upon its execution and delivery by the parties and will terminate 46 days after energization of the facility to the Company system but in no event later than May 15, 2001 unless earlier terminated, cancelled or superceded by a new long-term interconnection agreement prior to May 15, 2001.

3.1.1 "Energized" or "Energization" shall mean the day when the facility is first synchronized and delivering energy to the Company's Distribution System ("System") pursuant to this Agreement.

3.2 This Agreement may be terminated or cancelled as follows without prejudice to any other rights or remedies the parties may have under the Agreement or law.

3.2.1 The Company may cancel this Agreement upon one day's written notice to Customer without prejudice to any other rights or remedies of the Company if Customer defaults in the performance of any of its duties or obligations under this Agreement.

4. PARALLEL OPERATION

4.1 Subject to the terms and conditions in this Agreement, the Customer may operate the Facility in parallel with the Company's System for the sole

purpose of testing the equipment described in Exhibits A and B and selling the resulting electric test energy for the term of the agreement. Consistent with Section 8.1, Customer may operate the Facility in parallel with the Company's system only if Customer complies with all material terms and conditions of this Agreement. Unless a new long-term interconnection agreement permitting interconnection and parallel operation with Detroit Edison's electrical system becomes effective before the termination of this agreement, the Facility shall not continue to be operated in parallel with Detroit Edison's electrical system and shall be disconnected from Detroit Edison's electrical system on or before May 15, 2001. In the event Customer fails to disconnect the Facility from Detroit Edison's electrical system upon the termination of this Agreement and the Parties have not entered into a replacement interconnection agreement effective immediately after termination of this Agreement, Detroit Edison may disconnect the Facility from its electrical system.

4.2 The Detroit Edison electrical system shall mean the equipment constructed, owned, operated, or maintained by or for the Company that in the Company's reasonable judgment is required to be installed to accommodate distribution of electric energy to Customer's site and the interconnection of the Facility to the Company's facilities and thereon to the ITC System. The Detroit Edison electrical system will include the 230 kV conductor from the Navarre-Waterman Tap up to and including the disconnect switch at DIG Tower No. 3 as represented on Exhibit A.

4.3 Customer hereby grants free of cost to Company for the term of the Agreement the reasonable right of ingress and egress (and any rights of way or easements that may be required), consistent with the safe operation of the Facility, over property owned or controlled by Customer, provided that the business of Customer shall not be interfered with unreasonably and to the extent necessary in order to install, examine, test, calibrate, coordinate, operate, maintain, replace and/or remove metering and interconnection facilities.

4.4 Insofar as practicable, each party shall operate its equipment or electrical system so as to provide substantially all of the reactive power requirements of its own equipment or electrical system.

4.5 The Customer shall cause the Facility to meet, and continue to meet, the interconnection requirements of the Company specified in "Protective Operating and Telemetering Guidelines for Independently Owned Generation" published by the Company by no later than April 2, 2001. The Customer agrees that the Company has not waived its right to require compliance. In recognition of the importance of the Telemetering

requirement set forth in this Agreement, Customer agrees to pay the Company $5,000 per day for each day subsequent to April 2, 2001 that the Facility remains without fully operable and online Telemetering equipment. Customer further agrees to provide instantaneous 24-hour communication capability between a designated Facility operator and the appropriate Company electrical system personnel each day during which the Facility is without fully operable and online Telemetering equipment. Customer agrees to pay Company $5,000 per instance in which appropriate Company electrical system personnel are unable to contact a designated Facility operator.

5. CUSTOMER'S INSTALLATION

5.1 The Facility shall produce electric energy and the Customer shall deliver the electrical energy to the Company's system at a nominal voltage of 230 kilovolts, 60 hertz.

5.2 The Customer shall obtain the Company's approval of the design and performance specifications of the interconnection facilities, including protective equipment, before Energization. Once the approval has been obtained, the Customer shall not modify or otherwise change the interconnection facilities or protective equipment being utilized for testing and selling the electric test energy from the 250 megawatt steam turbine generator without first obtaining the Company's approval for such changes.

Any inspection or approval provided by the Company is for the purpose of determining compliance with the technical provisions of Company rules and regulations for service and is in no way a guarantee of methods or equipment used by the Customer, or of the safety of the Customer's installation.

5.3 The Customer shall be responsible for the costs of construction, ownership, operation, and maintenance of the interconnection facilities, including protective equipment and voltage regulation equipment.

5.4 The Customer shall furnish and install protective equipment satisfactory to Detroit Edison and reasonably necessary to eliminate interference with the satisfactory operation of the Company's electrical system, any of the Company's customers, or another interconnected public utility.

6. OPERATION OF THE FACILITY

6.1 The Customer shall keep and maintain the Facility and its interconnection facilities in an electrically safe operating condition in accordance with applicable codes and industry standards. Company specified interconnection and protective equipment shall, at a minimum, be operated and maintained in accordance with Company standards.

7. METERING

7.1 The Company, at the Customer's expense, shall provide the necessary meters and metering transformers to be utilized in measuring the Facility output at each point of service. Each Company circuit interconnecting the Company to the Customer shall constitute a point of service. The meters and equipment shall be installed by the Company and shall be maintained and operated by the Company in accordance with the Company's rules set forth in Section 6 of the Company's Rate Book for Electric Service. At the sole option of the Company, these rules are subject to change to conform to changes in such rules ordered by the Michigan Public Service Commission ("MPSC") for sales of electricity by the Company.

7.2 Authorized employees and agents of the Company shall have access to the Facility and associated equipment at all reasonable hours to test or inspect the metering installation to ensure that the accuracy requirements are met.

8. SUSPENSION OF INTERCONNECTED OPERATIONS

8.1 The Company may prohibit the Customer from operating its Facility in parallel with the Company's System and immediately disconnect the Facility from the Company system in the event: (i) Customer fails to comply with any material term of this Agreement, including, but not limited to Sections 2.1, 4.4, 5.2, 5.3, 5.4, 6.1, or 10.2 of this Agreement; (ii) in a Company electrical system emergency, including, but not limited to, abnormal circuit configurations or isolated operation of the Customer's generation, if, in the opinion of the Company, such parallel operation would contribute to the emergency; or (iii) if hazardous conditions should develop with the Facility, including, but not limited to, failure or improper operation of the protective relaying and communications equipment, consistent with Section 4.5.

8.2 The Company may suspend interconnected operations by the Customer when required to facilitate system maintenance, system construction, or

other activities related to the prudent or safe operation of the Company's electrical system. The Company whenever possible, shall provide the Customer with reasonable notice of such activities and such documentation as may be available concerning the need for such suspension.

9. FORCE MAJEURE

Either party shall be excused from performance of this Agreement if and to the extent that it shall be prevented from doing so by an event of "Force Majeure." Force Majeure includes but is not limited to war, civil disorder, and acts of God or other events of similar or dissimilar nature beyond the control of the affected party. If either party asserts that a Force Majeure has occurred, that party must notify the other party as soon as practicable by telephone and within 48 hours in writing of the cause of the event and the expected duration of the event. During any period of Force Majeure, the party excused from performance shall promptly, diligently and in good faith take all reasonable action required in order for it to be able to commence and resume performance of its obligations under this Agreement. The Customer's, its agent's, its affiliates' or an unaffiliated third party's untimely installation, or failure to install, the Telemetering equipment referred to in Section 4.4, regardless of the reason, does not constitute an event of Force Majeure or excuse any performance required by Section 4.4.

10. BILLING AND PAYMENT

10.1 **Billing Procedures.** Within thirty (30) days after the first day of each month, the Company shall submit an invoice to the Customer for charges arising under Section 2.2 of this Agreement not otherwise previously reimbursed by the Customer, and other charges as may be provided for under this Agreement. The invoice shall be paid by the Customer within twenty (20) days from the date of the invoice. All payments shall be made in immediately available funds payable to the Company, or by electronic funds to a designated bank account named by the Company. Interest shall be assessed on payments received after their due date at the lesser of (a) two (2) percent over the per annum rate of interest equal to the prime lending rate as may from time to time be published in *The Wall Street Journal* under "Money Rates" and (b) the maximum rate permitted by applicable law, said interest to be calculated from the due date of the bill to the date of payment.

10.2 **Billing Disputes.** In the event the Customer disputes a bill or portion thereof, or disputes any other claim or adjustment, the Customer shall pay the bill when due in the amount rendered and provide the Company with written notice of the objection at that time.. If it is subsequently determined or agreed that an adjustment to the bill is appropriate, the Company shall issue a revised bill. If the revised bill requires the Customer to make additional payment, then the Customer shall pay the additional amount within ten (10) Business Days of the Customer's receipt of the revised bill. If the revised bill requires the Company to refund all or any portion of a payment, then the Company shall refund to the Customer the appropriate amount within ten (10) Business Days of the issuance of the revised bill. Any over- or under-payment shall bear interest at the rate provided in this Article and shall be assessed from the time of said over/under-payment to the date of issuance of the revised bill or refund

10.3 **Audit Rights.** Upon reasonable notice to the Company, the Customer may from time-to-time audit the books and records of the Company related to all charges for costs invoiced to the Customer by the Company.

11. INDEMNITY AND INSURANCE

11.1 The Customer shall be liable for any damage to Company facilities and equipment or injuries attributable to or resulting from the installation, maintenance, possession or operation of the Facility.

11.2 The Customer will indemnify, defend and hold the Company and its officers, agents, representatives and employees harmless from any and all liability, claims, demands, costs, judgments, loss or damage, including attorney fees, resulting from the installation, maintenance, possession or operation of the Customer's Facility, except those caused by the sole negligence of the Company. Customer's indemnification shall not include damages and injuries occurring on the Company's electrical system that is used to serve other customers ("General Facilities") unless the damage or injuries on the General Facilities would not have occurred but for the operation of the Facility or is caused by the sole negligence of the Customer.

11.3 The Company shall indemnify, defend and hold the Customer and its officers, agents and employees harmless from any liability, claims, loss, and demands, costs, damage or judgments, including attorney fees, resulting from damage or injuries occurring on the Company's General Facilities unless the damage or injuries on the General Facilities would not have occurred but for the operation of the Facility or is caused by the sole negligence of the Customer.

11.4 Without limiting the Customer's indemnity obligation, the Customer shall maintain and furnish to the Company, current evidence of liability insurance in the amount of $2,000,000 for each occurrence. The Company shall be named as an additional insured under such policy. The initial evidence shall be provided by the Customer to the Company when it executes this Agreement. The current Certificate of Insurance is attached as Exhibit D.

12. JURISDICTION OF REGULATORY AUTHORITIES

12.1 If parallel operation by the Customer under this Agreement is not allowed by the Michigan Public Service Commission ("MPSC"), the Federal Energy Regulatory Commission ("FERC"), or any other legislative, judicial or regulatory body with jurisdiction over the parties and the subject matter of this Agreement then this Agreement shall terminate.

12.2 If the conditions of parallel operation, including referenced tariffs, riders or rules are modified in whole or in part by the MPSC, the FERC, or any other legislative, judicial or regulatory body, then either party shall have the right to terminate this Agreement upon written notice to the other.

13. LIMITATION ON DAMAGES

Except as is provided in this Agreement, neither the Customer nor the Company shall be liable for incidental or consequential damages.

14. NOTICES

Any notice or other communication permitted or required by this Agreement shall be made in writing, and any notice of default shall be made by registered mail, to the addresses set forth below:

If to the Company:

Director – Auto and Basic Industry
2000 Second Avenue
Suite 1220 WCB
Detroit, Michigan 48226

If to the Customer:

_____
_____
_____

Such addresses may be changed by written notice to the other party.

15. MISCELLANEOUS

15.1 This Agreement shall be binding upon and inure to the respective successors and assignees of the parties.

15.2 No assignment of this Agreement by the Customer or its rights or obligations hereunder may be made without prior approval by the Company and until the assignee assumes the full obligations of the Customer. Notwithstanding any such assignment Customer remains fully responsible for performance of all obligations under this Agreement.

15.3 This Agreement sets forth the entire agreement of the parties with respect to the subject matter hereof and supercedes all prior agreements and understandings.

15.4 The section headings are for ease of reference only, do not form part of this Agreement, and shall not affect the meaning or interpretation of this Agreement.

15.5 Except for such obligations as are necessarily affected by termination or cancellation of this Agreement, termination or cancellation shall not relieve either party of any obligations arising under this Agreement, including, without limitation, indemnification or refunding obligations.

15.6 None of the provisions of this Agreement shall be considered waived by the Company or the Customer unless such waiver is in writing. No such waiver shall be a waiver of any past or future default, breach or modification of any of the terms, conditions or covenants of this Agreement unless expressly set forth in such waiver.

15.7 This Agreement is the product of negotiation and neither party shall be deemed to be the drafter of this Agreement or any part thereof.

15.8 This Agreement is for the sole benefit of the parties and no party intends to benefit any other person or entity.

15.9 This Agreement shall not be used by either Customer or Company as precedent in any litigation (regulatory, civil or otherwise) concerning the appropriate terms and conditions of a long-term interconnection arrangement between Customer and Company. It is expressly agreed that this Agreement has been entered into by the Company solely for the stated term of this Agreement and solely for the purpose of facilitating Customer's testing and selling the resulting electric test energy from its 250 megawatt steam turbine generator and shall not be construed as precedent for further or additional interconnection arrangements.

15.10 This Agreement shall be governed by and construed in accordance with the laws of the State of Michigan.

THE DETROIT EDISON COMPANY

By _____

Its Sr Vice Pres

Date 3/15/01

DEARBORN INDUSTRIAL GENERATION, L.L.C.

By _____

Its VICE PRESIDENT

Date MARCH 14, 2001

STARTUP TESTING AND PARALLEL OPERATION INTERCONNECTION AGREEMENT

SCHEDULE A
GENERATOR IMBALANCE

Generator Imbalance Service is a service of the International Transmission Company (ITC).

Generator imbalance is the difference between the schedule from the Customer's Facility in an hour and the amount of energy actually generated in that hour by the Customer's Facility.

For each hour in which there is generator imbalance, measured in kWh, the Customer shall be billed or credited as follows:

Generator Imbalance Within the Deviation Band (Within 1%, plus or minus):

If ITC provides energy, the Customer shall pay ITC for 100% of ITC's cost for supplying such energy in the hour the imbalance occurred multiplied times the amount of the generator imbalance in that hour.

If ITC receives energy, ITC shall credit the Customer 100% of ITC's savings for receiving such energy in the hour the imbalance occurred multiplied times the amount of the generator imbalance in that hour.

Generator Imbalance Outside the Deviation Band (from 1 to 5% plus or minus):

If ITC provides energy, the Customer shall pay ITC the greater of $100/MWh on-peak ($50/MWh off peak) or 110% of ITC's cost for supplying such energy in the hour the imbalance occurred multiplied times the amount of the generator imbalance in that hour.

If ITC receives energy, ITC shall credit the Customer 90% of ITC's savings for receiving such energy in the hour the imbalance occurred multiplied times the amount of the generator imbalance in that hour.

Generator Imbalance Outside the Deviation Band (greater than 5% plus or minus):

If ITC provides energy, the Customer shall pay ITC the greater of $100/MWh on-peak ($50/MWh off peak) or 150% of ITC's cost for supplying such energy in the hour the imbalance occurred multiplied times the amount of the generator imbalance in that hour.

STARTUP TESTING AND PARALLEL OPERATION INTERCONNECTION AGREEMENT

SCHEDULE A
GENERATOR IMBALANCE

If ITC receives energy, ITC shall credit the Customer 75% of ITC's savings for receiving such energy in the hour the imbalance occurred multiplied times the amount of the generator imbalance in that hour.

Size of Generator Imbalance Deviation Band:

In recognition of the fact that small generator imbalance is unavoidable, a deviation band of +/- 1.00 % of scheduled output is established for Generation Imbalance Service.

Generation Imbalance Service is an as-available service and ITC reserves the right to discontinue its provision when it is resource deficient or the ITC System is in low load conditions. The Customer will be responsible for taking necessary actions to eliminate its generator imbalances under these conditions when notified by ITC.

ITC and the Customer agree that in the event that ITC files, and the FERC accepts a tariff for Generation Imbalance Service then the provisions of this Schedule A will no longer apply and shall be superseded by the filed tariff.

On-peak and Off-peak hours will be those as defined in the OATT.

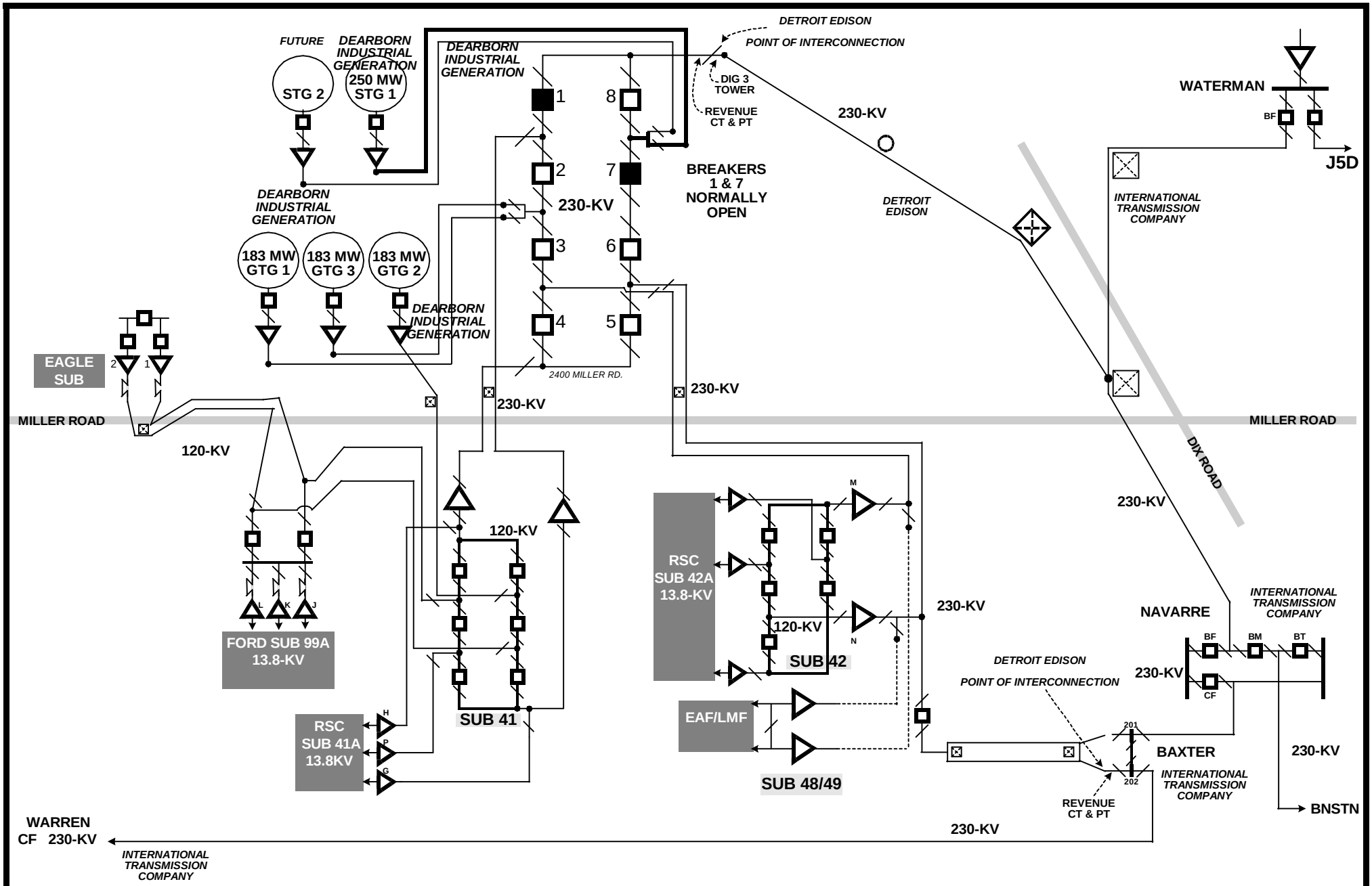
FUTURE
DEARBORN INDUSTRIAL GENERATION
250 MW
STG 1
STG 2
DEARBORN INDUSTRIAL GENERATION
DETROIT EDISON
POINT OF INTERCONNECTION
DIG 3 TOWER
REVENUE CT & PT
230-KV
WATERMAN
BF
J5D
INTERNATIONAL TRANSMISSION COMPANY
BREAKERS 1 & 7 NORMALLY OPEN
DETROIT EDISON
DEARBORN INDUSTRIAL GENERATION
183 MW GTG 1
183 MW GTG 3
183 MW GTG 2
DEARBORN INDUSTRIAL GENERATION
1
2
3
4
5
6
7
8
230-KV
2400 MILLER RD.
EAGLE SUB
MILLER ROAD
MILLER ROAD
230-KV
230-KV
120-KV
DIX ROAD
230-KV
120-KV
FORD SUB 99A
13.8-KV
RSC SUB 42A 13.8-KV
M
N
120-KV
SUB 42
230-KV
NAVARRE
INTERNATIONAL TRANSMISSION COMPANY
BF
BM
BT
CF
DETROIT EDISON
POINT OF INTERCONNECTION
230-KV
RSC SUB 41A 13.8KV
H
P
G
SUB 41
EAF/LMF
SUB 48/49
201
202
BAXTER
230-KV
INTERNATIONAL TRANSMISSION COMPANY
REVENUE CT & PT
BNSTN
WARREN CF 230-KV
230-KV
INTERNATIONAL TRANSMISSION COMPANY

EXHIBIT A

STARTUP TESTING AND PARALLEL OPERATION INTERCONNECTION AGREEMENT

EXHIBIT B

The Facility, in general, includes the following generation equipment:

UNIT: A 250 Megawatt steam turbine generator located on or near the Rouge industrial complex.

The Customer's electrical system, in general, includes the following equipment:

The 230 kv conductor from the 250 Megawatt steam turbine generator to the 230 kV GIS.

The 230 kV GIS from Breaker 1 & 7 up to the Company's electrical system with Breakers 1 & 7 open and Breaker 8 closed.

STARTUP TESTING AND PARALLEL OPERATION INTERCONNECTION AGREEMENT

Exhibits C & D

These exhibits will be (1) the signed Rider #3 agreement; **Exhibit C**, and (2) the certificate of insurance; Exhibit **D** provided by the Seller.