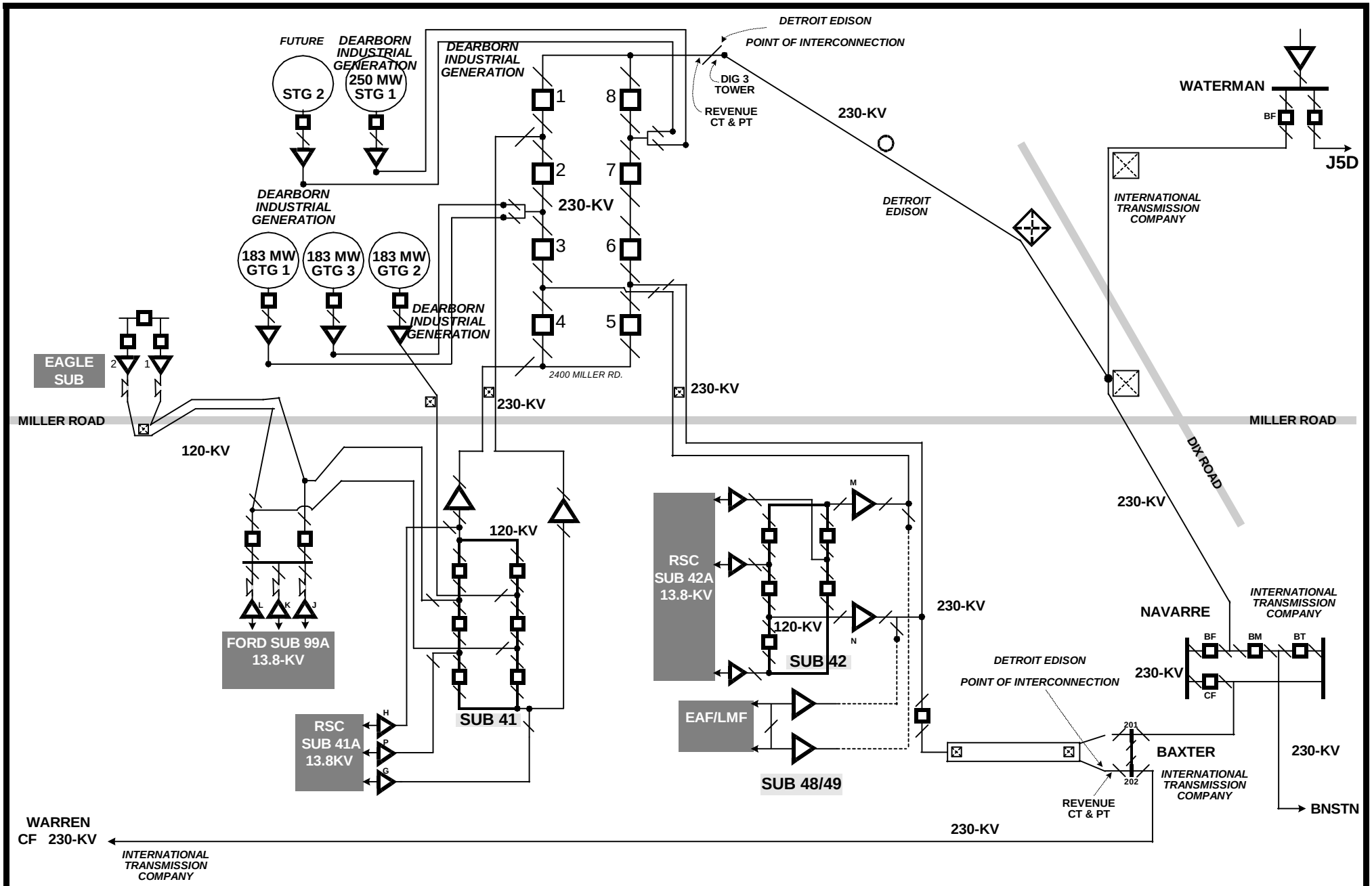
FUTURE
DEARBORN INDUSTRIAL GENERATION
250 MW
STG 1
STG 2
DEARBORN INDUSTRIAL GENERATION
DETROIT EDISON
POINT OF INTERCONNECTION
DIG 3 TOWER
REVENUE CT & PT
230-KV
WATERMAN
BF
J5D
INTERNATIONAL TRANSMISSION COMPANY
DETROIT EDISON
DEARBORN INDUSTRIAL GENERATION
183 MW GTG 1
183 MW GTG 3
183 MW GTG 2
DEARBORN INDUSTRIAL GENERATION
1
2
3
4
5
6
7
8
230-KV
2400 MILLER RD.
EAGLE SUB
2
1
MILLER ROAD
230-KV
230-KV
MILLER ROAD
DIX ROAD
120-KV
120-KV
FORD SUB 99A
13.8-KV
L
K
J
SUB 41
RSC
SUB 41A
13.8KV
H
P
G
RSC
SUB 42A
13.8-KV
M
N
120-KV
SUB 42
230-KV
EAF/LMF
SUB 48/49
NAVARRE
INTERNATIONAL TRANSMISSION COMPANY
BF
BM
BT
CF
DETROIT EDISON
POINT OF INTERCONNECTION
230-KV
201
202
BAXTER
INTERNATIONAL TRANSMISSION COMPANY
REVENUE CT & PT
230-KV
BNSTN
WARREN
CF 230-KV
230-KV
INTERNATIONAL TRANSMISSION COMPANY

EXHIBIT A

Exhibit B

CIAC Facilities Cost and O&M Cost

Company Distribution/Interconnection Facilities

Radial Tap off Navarre-Waterman line *

1) 230 kV line	$ 290,000.00
2) Monthly O&M	$ 4,350.00
3) Metering & Relay Modifications	$ 310,000.00
4) Monthly O&M Charge	$ 4,650.00

Future (2002) Reroute of Radial Tap off Navarre–Waterman *

5) 230 kV line reroute	$ 500,000.00
6) Monthly O&M	$ 7,500.00

Items 5&6 replace Items 1&2 when reroute is completed

Radial line from Baxter *

7) 230 kV Metering, Station, etc.	$ 200,000.00
8) Monthly O&M Charge	$ 3,000.00

DECo Facility (Generation) Metering *

9) Metering	$300,000.00
10) Monthly O&M	$ 4,500.00

Miscellaneous One Time Charges *

11) Removal of Section PL 153	$ 21,004.00
12) Company Technical Support to DIG	$ 40,000.00

ITC System Modifications *

Breaker Replacements

13) Warren 120 kV circuit breaker	$130,000.00
14) Monthly Charge:	$ 1950.00

Administrative and Scheduling Charge *

15) Monthly Charge-	$1500.00

* The Interconnection modifications are still under construction; these cost are preliminary and subject to final verification; these charges will be applicable upon interconnected operations and will be subject to true-up in accordance with Article 9 of the Agreement.

Schedule A

Generation Imbalance Service

Generator imbalance is the difference between the schedule from the Customer's Facility in an hour and the amount of energy actually generated in that hour by the Customer's Facility.

For each hour in which there is generator imbalance, measured in kWh, the Customer shall be billed or credited as follows:

Generator Imbalance Within the Deviation Band (Within 1%, plus or minus):

If ITC provides energy, the Customer shall pay ITC for 100% of ITC's cost for supplying such energy in the hour the imbalance occurred multiplied times the amount of the generator imbalance in that hour.

If ITC receives energy, ITC shall credit the Customer 100% of ITC's savings for receiving such energy in the hour the imbalance occurred multiplied times the amount of the generator imbalance in that hour.

Generator Imbalance Outside the Deviation Band (from 1 to 5% plus or minus):

If ITC provides energy, the Customer shall pay ITC the greater of $100/MWh on-peak ($50/MWh off peak) or 110% of ITC's cost for supplying such energy in the hour the imbalance occurred multiplied times the amount of the generator imbalance in that hour.

If ITC receives energy, ITC shall credit the Customer 90% of ITC's savings for receiving such energy in the hour the imbalance occurred multiplied times the amount of the generator imbalance in that hour.

Generator Imbalance Outside the Deviation Band (greater than 5% plus or minus):

If ITC provides energy, the Customer shall pay ITC the greater of $100/MWh on-peak ($50/MWh off peak) or 150% of ITC's cost for supplying such energy in the hour the imbalance occurred multiplied times the amount of the generator imbalance in that hour.

If ITC receives energy, ITC shall credit the Customer 75% of ITC's savings for receiving such energy in the hour the imbalance occurred multiplied times the amount of the generator imbalance in that hour.

Size of Generator Imbalance Deviation Band:

In recognition of the fact that small generator imbalance is unavoidable, a deviation band of +/- 1.00 % of scheduled output is established for Generation Imbalance Service.

Generation Imbalance Service is an as-available service and ITC reserves the right to discontinue its provision when it is resource deficient or the ITC System is in low load conditions. The Customer will be responsible for taking necessary actions to eliminate its generator imbalances under these conditions when notified by ITC.

ITC and the Customer agree that in the event that ITC files, and the FERC accepts a tariff for Generation Imbalance Service then the provisions of this Schedule A will no longer apply and shall be superseded by the filed tariff.

On-peak and Off-peak hours will be those as defined in the OATT.

SCHEDLUE B

VOLTAGE SCHEDULES

AT THE POINT OF INTERCONNECTION

Commencing with the effective date of the Interconnection Agreement, Customer shall maintain the following voltage schedules at the Interconnection Point as communicated by ITC, or its agent, from time to time:

Schedule #1 - ITC Control Area Maximum Load for the day greater than 10,000 MW

Operating Time	Voltage (kV)
0000-0700	237
0700-2100	239
2100-2400	237

Schedule #2 - ITC Control Area Maximum Load for the day between 8,500 and 10,000 MW

Operating Time	Voltage (kV)
0000-0700	237
0700-2000	239
2000-2400	237

Schedule #3 - ITC Control Area Maximum Load for the day between 7,000 and 8,500 MW

Operating Time	Voltage (kV)
0000-0800	237
0800-1900	238
1900-2400	237

Schedule #4 - ITC Control Area Maximum load for the day below 7,000 MW

Operating Time	Voltage (kV)
0000-0600	237
0600-2100	237
2100-2400	237

ITC's determination of whether Schedule 1, 2, 3, or 4 should be used for a given period shall be based on expectations of system requirements and conditions. The voltage schedule to be used, for the upcoming week, shall be communicated to Customer each Friday and at such other times as changing system requirements and conditions may require. The voltage schedules will be reviewed and updated as needed.

STATE OF MICHIGAN

BEFORE THE MICHIGAN PUBLIC SERVICE COMMISSION

In the matter of the application of THE DETROIT EDISON COMPANY for approval of an unexecuted Distribution Interconnection Agreement associated with the "Rouge Complex" and Dearborn Industrial Generation, L.L.C.	)))))))	Case No. U-12866

PROOF OF SERVICE

STATE OF MICHIGAN)
) ss
COUNTY OF WAYNE)

DORIS J. HILL, being duly sworn deposes and says that on the 16th day of April, 2001 she served a copy of The Detroit Edison Company's **AMENDED APPLICATION FOR EX *PARTE* APPROVAL OF UNEXECUTED DISTRIBUTION INTERCONNECTION AGREEMENT** upon the parties listed on the attached Service List, a copy of which is attached, by electronic mail and by depositing properly addressed sealed and stamped envelopes into the United States mail by first class.

DORIS J. HILL

Subscribed and sworn to before
me this 16th day of April, 2001

SHERRIN M. SHEHAN
Notary P... MI
My Comm... -1-03.

SERVICE LIST
MPSC CASE NO. U-12866

Attorney for the Michigan Public Service Commission Staff
David A. Voges, Esq.
Michigan Public Service Commission
6545 Mercantile Way
Suite 15
Lansing, Michigan 48911

Attorney for CMS Enterprises Company
Anthony Morrow
330 Town Center Drive
Suite 1100
Dearborn, Michigan 48126